AN ELECTRONIC SYSTEM FOR DIGITALLY PROGRAMMABLE ANALOG CIRCUITS STUDY

Ivailo Milanov Pandiev[1], Peter Ivanov Yakimov[2], Doycho Dimitrov Doychev[3], Todor Georgiev Todorov[4], Veselin Yanev Stanchev[5]

Department of Electronics, Technical University of Sofia, Kliment Ohridski Street No 8, 1000 Sofia, Bulgaria, e-mail: [1]ipandiev@tu-sofia.bg, [2]pij@tu-sofia.bg, [3]dddoychev@tu-sofia.bg, [4]ttodorov@tu-sofia.bg, [5]vstanchev@tu-sofia.bg

In this paper we present a specific electronic system for analysis and design of digitally programmable analog circuits. The created electronic system is with module structure and envelops specific circuits such as programmable gain amplifiers (PGAs), attenuators, analog circuits with CMOS digital potentiometers, active filters, direct digital synthesis (DDS) waveform generators, digital circuits with microcontroller, etc. In particular the system consists of the following six separate electronic modules: (1) electronic circuits with CMOS digital potentiometers; (2) electronic circuits with monolithic PGAs; (3) programmable active RC and SC filters (4) monolithic direct digital synthesis (DDS) generators; (5) digitally-controllable audio electronic systems; (6) HF PLL synthesizer. For some of the modules, PIC microcontrollers are programmed with Evaluation PIC 18 board (version 1.0). The Evaluation PIC 18 board includes programmer, communicational channel for personal computer and connectors to additional sensors. The electronic system, presented here, is intended for laboratory practice with students in Electronics in the Technical University of Sofia.

Keywords: analog circuit design, digitally programmable analog circuits, electronic modules, PGA, CMOS digital potentiometers, direct digital synthesis, PLL.

1. INTRODUCTION

The wide application of electronics within industry, ecology, transport and life are a reason to design varies analog and digital circuits with small size, weight and power consumption. The significant mean for enhances of electronics have mixed (analog/ digital) circuits and in particular, digitally programmable analog circuits. Usually they are realized as specialized integrated circuits, with analog and digital functions joined together on the same chip or as discrete electronic circuits, which consist of basically operational amplifiers, common RLC components, CMOS analog switches, multiplexers and digital potentiometers. An important part to those electronic circuits is the digital circuit, necessary for programming the dynamic parameters of the analog circuit. The schematic of the digital circuit strongly depends on the structure of the analog electronic circuit. Normally the digital circuits are realized with microcontrollers, logical elements and small number of passive components.

Nowadays training departments in electronics industry in collaboration with universities have a strong interest to introduce and promote new technologies and effective workplace performance support tools to work force of the professionals and students. The analyses of the analog circuit design literature and Internet resources shows that many European and American semiconductor manufactories produced and

offered various evaluation electronic systems for laboratory practice and learning programs with the aim to optimize human performance. In this paper, using the best practice in the analog circuit design area, we present a specific electronic system intended for analysis and design of digitally programmable analog circuits. The system will be used for laboratory practice with students in Electronics in the Technical University of Sofia.

2. Functional Structure of the Electronic System for Digitally Programmable Analog Circuits Study

Using the proposed practical approach to design digitally programmable analog circuits, presented in [1], an electronic system is developed. The created electronic system is with module structure and envelops specific digitally programmable analog circuits such as PGAs, attenuators, programmable active filters, analog electronic circuits with CMOS digital potentiometers, DDS generators, PLL, microcontrollers, etc. In particular the system consists of the following six separate electronic modules: (1) electronic circuits with CMOS digital potentiometers; (2) electronic circuits with monolithic PGAs; (3) programmable active RC and SC filters (4) monolithic direct digital synthesis (DDS) generators; (5) digitally-controllable audio electronic systems; (6) HF PLL synthesizer.

For programming some of the PIC microcontrollers of the modules an Evaluation PIC 18 board (version 1.0) is used. This module is an embedded tool, designed to facilitate the development and testing of electronic schemes, containing PIC-microcontrollers and peripheral devices such as keyboards, displays, rotary encoders, digital temperature sensors, etc. The Evaluation PIC 18 board is a co-production between Technical University of Sofia and Technical University of Illmenau, Germany.

3. Functional and Technical Characteristics of the Electronic Modules

The electronic system is structured in six modules plus one annexed controlling module with programmer, integrated with the MPLAB development environment. Some of the important functional and technical characteristics and parameters of the modules are presented below.

Module 1. 'Electronic circuits with CMOS digital potentiometers': This module, produced by Analog Devices is an electronic system for analysis and research of basic circuits with dual CMOS digital potentiometer (256/1024 position resolution) [2]. The simplified circuit diagram of module 4 is shown in Fig. 1. The module consists of evaluation board, communicational channel for PC and controlling software. The software for programming potentiometers can be operated under Windows 2000 or XP. In particular module 1 consists of one dual digital potentiometer AD5235 from Analog Devices [3, 4], voltage reference ($+2{,}5V$) IC AD1582, FET-input op amp AD820 and several RC elements. The ac parameters of analog circuits are digitally programmable by an IC AD5235. The AD5235 performs

the same electronic adjustment function as a mechanical dual potentiometer with enhanced resolution, solid state reliability, and superior low temperature coefficient performance. Another key feature of the AD5235 is that the potentiometer contains on-chip E^2MEM memory to store and retain its setting after power supply is removed and reapplied.

Based on the circuit diagram the electronic circuits, which can be realized, are inverting amplifier/attenuator, non-inverting amplifier, bipolar unity gain amplifier, programmable current-to-voltage converter, programmable low-pass filters, phase shifter and programmable Wien-bridge oscillator with amplitude control.

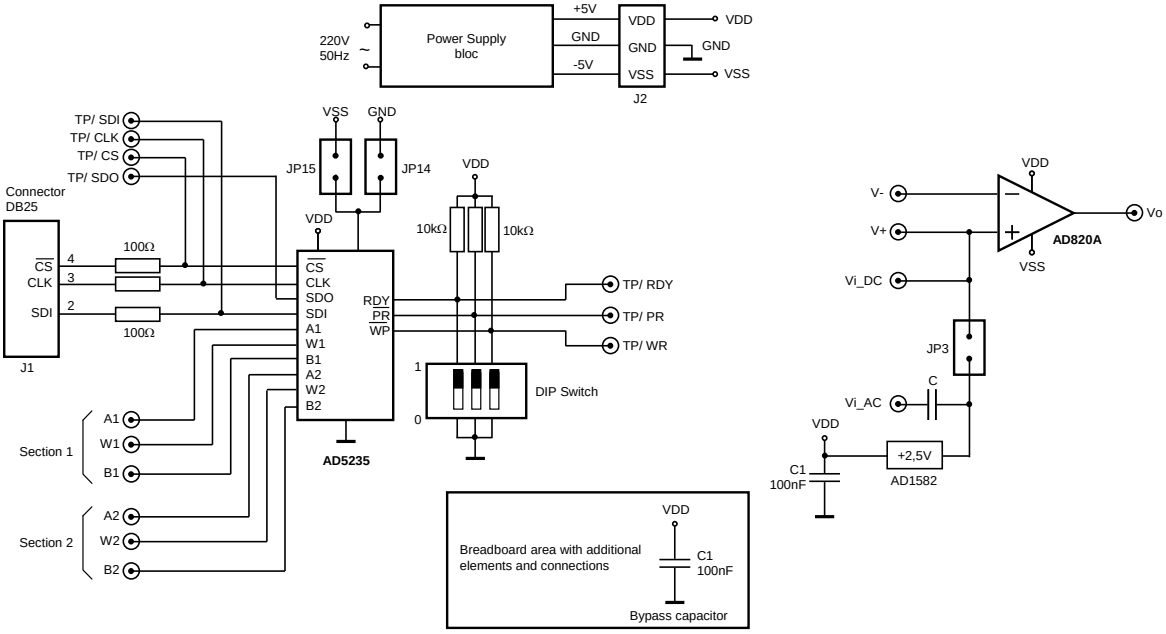

Fig. 1. Simplified circuit diagram of Module 1: "*Electronic circuits with CMOS digital potentiometers*".

Additionally to this module power supply bloc is designed, also external passive elements and connections are placed on the available breadboard area. The input and output signals can use BNC connectors that slide vertically onto the additional board to the module. Those enhancements facilitate the work with the module and adding some new functional possibilities, such as modification of the operating diapason for voltage gain of the existing circuits, modification the structure of the electronic circuits, realization of new digitally programmable circuits, etc.

Module 2. 'Electronic circuits with monolithic PGAs': This module, produced by Microchip Tech., providing versatile selection of input channels and voltage gains (between 1V/V and 32V/V) to evaluate monolithic PGAs performance [5]. The simplified circuit diagram of this module is presented in Fig. 2. The single-channel MCP6S21 and six-channel MCP6S26 from Microchip Tech. have been selected for this module [6]. The microcontroller PIC16F676 is used to program the PGAs via SPI interface according to the user inputs. User inputs are selected using the on-board DIP switch settings that are configured according to the table printed on the module. The six channels of the MCP6S26 and the PGA gains of 1, 2, 4, 5, 8, 10, 16 and 32 V/V can be configured. The two PGAs are cascaded, while the signal output of the

MCP6S26 is directly connected to the analog input of the MCP6S21. This configuration outputs a maximum signal gain of 1024 V/V. The ICSP connector provides the capability of programming the microcontroller PIC16F676 from a personal computer. The MCP6S21 and MCP6S26 have a reference voltage input pin to offset the output signal. There are three reference voltage options on the board: 2,5V, adjustable reference voltage (0V to +5V) with one mechanical potentiometer and ground. These options can be selected using the on-board jumper JP1.

The PGA output voltage, with respect to the input and reference voltages, can be determined using the following equation:

(1) $U_{out1} = A_{U,MCP6S26}(U_{in} - V_{ref}) + V_{ref}$ and

(2) $U_{out1} = A_{U,MCP6S26} . A_{U,MCP6S21}(U_{in} - V_{ref}) + V_{ref}$,

where $A_{U,MCP6S26}$ is the voltage gain of MCP6S26 with values 1, 2, 4, 5, 8, 10, 16 and 32 V/V, $A_{U,MCP6S21}$ is the voltage gain of MCP6S21 with values 1, 2, 4, 5, 8, 10, 16 and 32 V/V, U_{in} is the input voltage at the MCP6S26' selected channel and V_{ref} is the reference voltage at *Vref* pin at the MCP6S26 and MCP6S21.

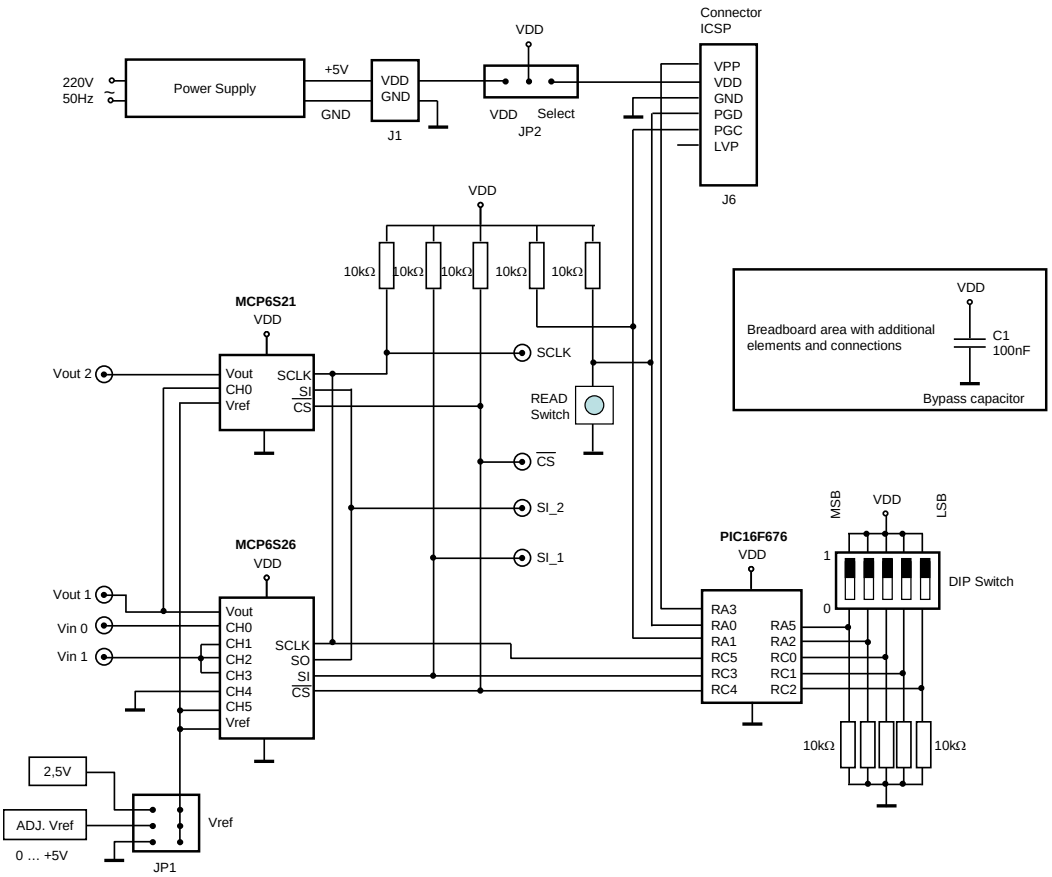

Fig. 2. Simplified circuit diagram of Module 2: "*Electronic circuits with monolithic PGAs*".

Additionally to this module a power supply bloc is designed and supplementary electronic circuits are realized on a separate PCB. Those new analog circuits with the PGAs leave realization of cascaded programmable amplifiers, PGAs with modified voltage gain, I − U converters, U − I converters, etc. The input and output signals of the module use BNC connectors that slide vertically onto the additional board.

Module 3. 'Programmable active filters': This module is an electronic system for synthesis and analysis of programmable active RC and SC filters. The simplified circuit diagram of module 3 is shown in Fig. 3. This module provides possibility for realization of the programmable low-pass, high-pass, band-pass and notch filters with a variety of responses, including Butterworth, Bessel, Chebychev, elliptic (Cauer) and custom responses. The module 3 is divided on three sub-modules, which are based on (1) monolithic RC filters with digital-to-analog converters (DACs), (2) monolithic SC filters and (3) microprocessor programmable active filters.

The first sub-module uses the universal active RC filter UAF42, two op-amps, two multiplying DACs (MDACs) and a small number of resistors. The UAF42 provides a two pole filter building bloc with low sensitivity to external component variations [4, 7]. The MDACs as voltage attenuators alter the unity-gain bandwidth of the integrators on board the UAF42. For different digital code applied to the address inputs of the MDACs the pole frequency f_p is changed from minimal to maximal value, according to the equation:

(3) $$f_p = \frac{1}{2\pi}\sqrt{\frac{1}{T_1 T_2}},$$

where T_1 and T_2 is the time constant of the two integrators.

The second sub-module is based on a universal dual active SC filter LTC1060 [8]. The filter parameters such as pole frequency f_p and quality factor Q can be changed by varying the external clock frequency f_{clk} and external resistor ratio. The pole frequency f_p is proportional to the clock frequency f_{clk}.

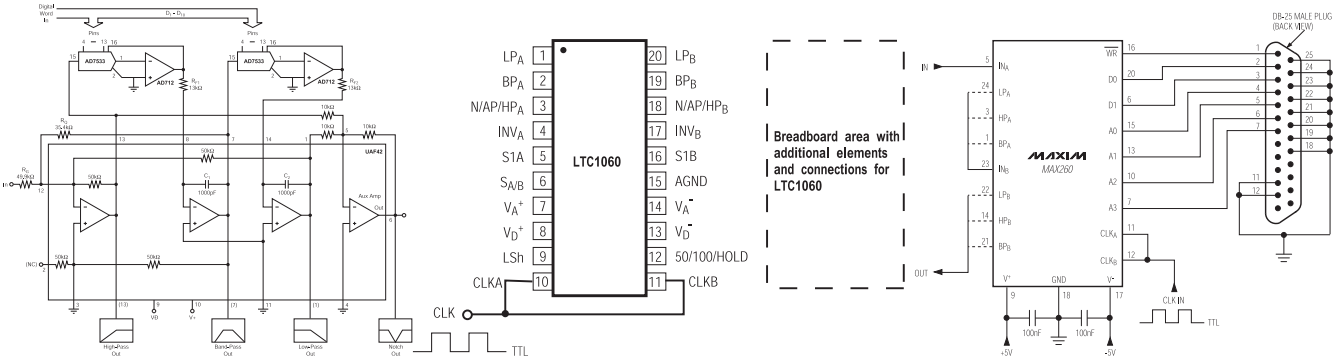

Fig. 3. Simplified circuit diagram of Module 3: Programmable active filters.

The third sub-module uses the microprocessor programmable universal active SC filter MAX260 [9]. The IC MAX260 allows microprocessor control of filter functions. No external components (resistors or capacitors) are required for a variety of low-pass, high-pass, band-pass, notch and all-pass configurations. The type of filter configuration and filter parameters such as pole frequency f_p and quality factor Q can be programmed by microprocessor or personal computer through parallel printer port. Additionally the pole frequency of the filters can be changed by varying the external clock frequency.

Module 4. 'Analyse of monolithic direct digital synthesis (DDS) generators':

This module includes electronic system and controlling software for personal computer. The core of the module is monolithic DDS waveform generator AD9833BRM from Analog Devices [10]. The AD9833 is a programmable generator capable of producing sine, triangular and square wave output signals. The internal circuitry of the AD9833 consists of a numerically controlled oscillator (NCO), a frequency and

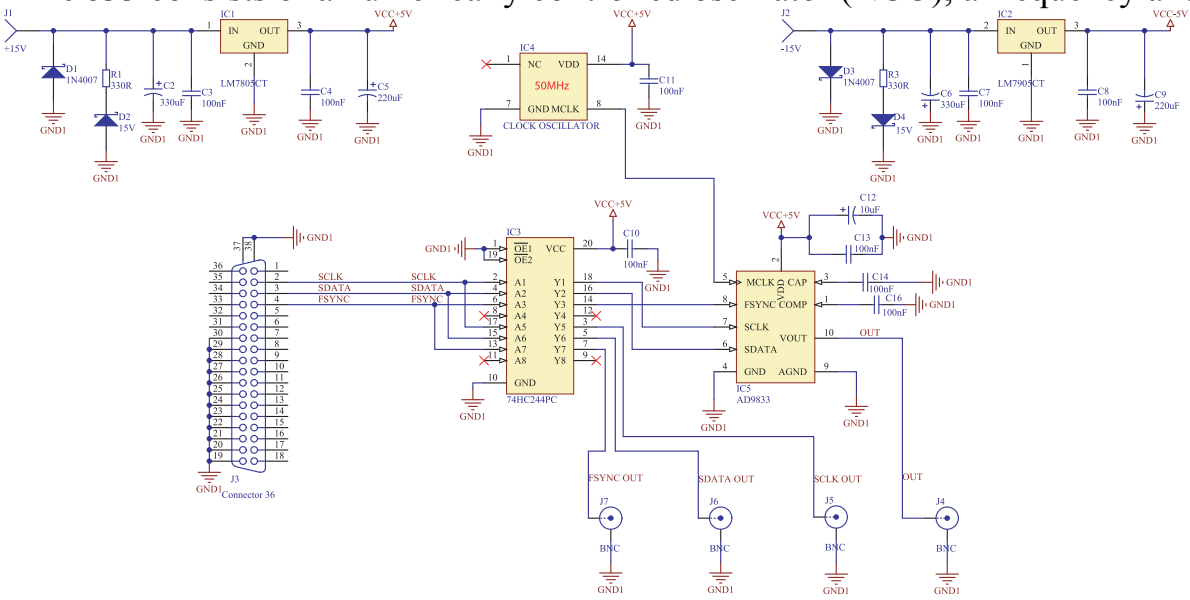

Fig. 4a. Circuit diagram of DDS waveform generator for Module 4.

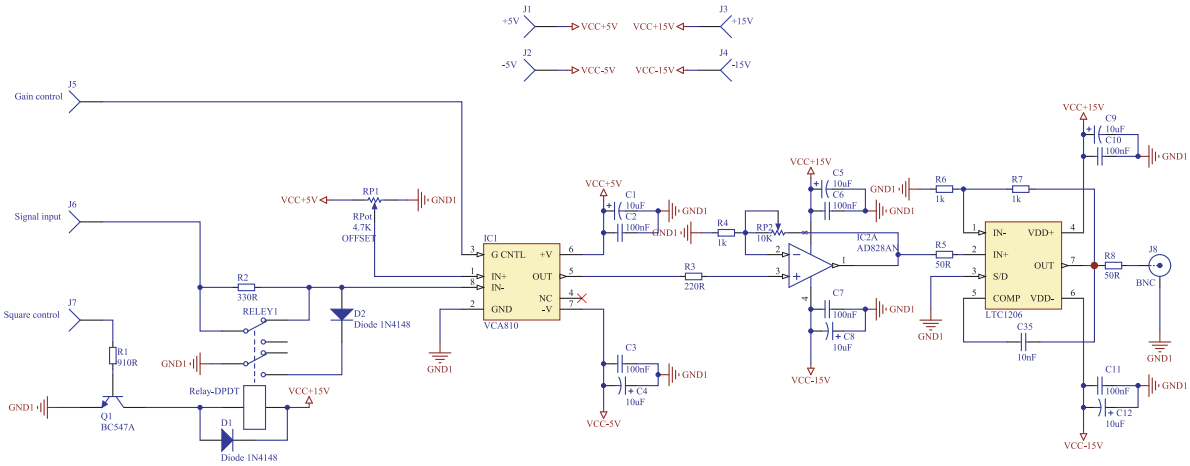

Fig. 4b. Circuit diagram of the attenuator and output amplifier for Module 4.

phase modulators (counters), ROM which stores one or more integral number of cycles of a sine-wave signal, digital-to-analog converter (DAC) and low-pass filter [4]. The operation of the IC AD9833 is the following: a stable clock ($50MHz$) from external clock generator drives a programmable-read-only-memory (PROM) which stores one period of a sine-wave signal in a digital format. As the address counter steps through each memory location, the corresponding digital amplitude of the signal at each location drives a DAC which in turn generates the analog output signal. The spectral purity of the final analog output signal is determined primarily by the DAC. The minimum and maximum output voltage of the sine and triangular signals are $30mV$ and $0{,}6V$, respectively. For the square wave output signal the minimum and maximum voltage are $0V$ and $+5V$ (for $+5V$ power supply of the IC), respec-

tively. The frequency range of the output signals is from $0MHz$ to $25MHz$ for $50MHz$ clock generator. The circuit diagram for DDS waveform generator of module 4 is represented in Fig. 4a.

For programming the DDS waveform generator with AD9833 the controlling software is provided by the manufacturer's, which runs under MS Windows 98, 2000 or XP. The software will allow the user to control all functions of the AD9833 via the printer port of a personal computer.

In addition, the created electronic module features a programmable attenuator and output amplifier (Fig. 4b). The attenuator is realized with VCA810 from Texas I. The VCA810 is a dc-coupled, wideband, voltage-controlled gain amplifier. It provides to varying the voltage gain over a $-40dB$ $(0{,}01)$ to $+40dB$ (100). The control voltage U_{contr} varies the voltage gain of the amplifier according to the exponential relationship $A_U = 10^{-2(U_{contr}+1)}$ for $-2V \le U_{contr} \le 0V$. The voltage U_{contr} is obtained by a digital-to-analog converter. The output amplifier is realized with one non-inverting amplifier, using AD828 and output buffer with CFA LT1206.

Module 5. 'Digitally-controllable audio electronic systems' (Fig. 5): This module is intended for research the methods for transmission audio signals through digital channels (using standard buses AES and I^2S, and standard control interfaces I^2C and SPI). The core of the module is monolythic stereo audio codec CS4222 from Crystal (Cirrus Logic). The analog inputs of the CS4222 use op-amps to implement AC coupled input buffer. Full-scale range is 2Vrms. Each DAC output drives an op-amp that is configured as a differential to single-ended converter. This circuit also performs two-pole Butterworth filtering and is AC coupled. I^2S port provides an interface to the serial audio clocks and data. A simple interface connects module to parallel port of personal computer. An SPI/I2C serial control port allows the CS4222 to be configured and controlled using the supplied software.

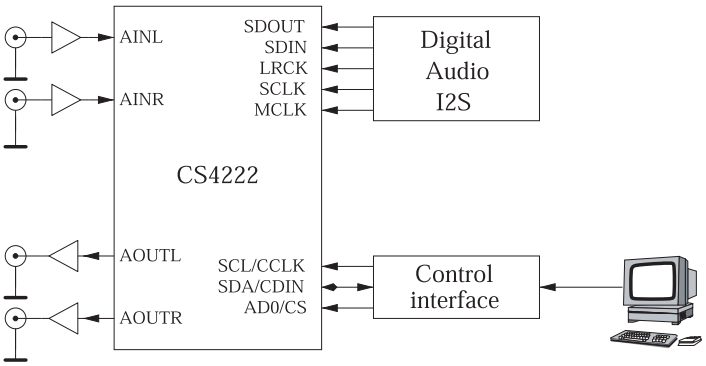

Fig. 5. Simplified bloc diagram of Module 5: Digitally-controllable audio electronic systems

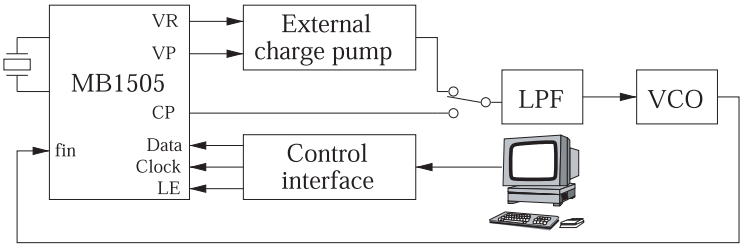

Fig. 6. Simplified bloc diagram of Module 6: HF PLL synthesizer

Module 6. 'HF PLL synthesizer' (Fig. 6): This module is an electronic system for research and observation of MB1505 (Fujitsu) single chip serial input PLL frequency synthesizer. It contains 600MHz two modulus prescaler that can select of either 32/33

or 64/65 divide ratio, control signal generator, programmable reference divider, phase comparator with phase conversion function, charge pump, crystal oscillator, programmable divider and analog switch to speed up lock up time. A simple interface connects module to parallel port of personal computer. Using external VCO it is possible to design sinusoidal signal source from 10MHz to 600MHz. An SPI like (Data, Clock, Latch enable) serial control port allows the MB1505 to be configured and controlled using the supplied software.

4. CONCLUSIONS

This paper presented the following achievements of the team of the developers:

- Creating of an electronic system with module structure, intended for laboratory practice with students in Electronics in the Technical University of Sofia;
- Development of four electronic modules: (1) programmable active RC and SC filters; (2) monolithic direct digital synthesis (DDS) generators; (3) digitally-controllable audio electronic systems (4) HF PLL synthesizer;
- Enhancement the two electronic modules (1) "*Electronic circuits with CMOS digital potentiometers" (EVAL-AD5235EBZ)* and (2) "*Electronic circuits with monolithic PGAs" (MCP6S2X Evaluation board)*, produced by Analog Devices and Microchip Tech., respectively.

The pilot test of the developed electronic system will be performed with ten 2nd year regular students in the course "Digitally programmable analog circuits and systems" of the master degree educational program in the Technical University of Sofia. During the test the evaluation will be focused on usability of the new technologies used, instructional effectiveness and learners' attitudes.

ACKNOWLEDGEMENT

This paper is part of a project "Practical approaches to design and modeling digitally programmable analog circuits" (contract № 08054ni-3/2008), which is sponsored by the Technical University of Sofia, Bulgaria.

5. REFERENCES

[1] Pandiev, I., P. Yakimov, D. Doychev, T. Todorov, V. Stanchev. *A practical approach to design and modeling digitally programmable analog circuits.* Electronics – ET 2008 (to be presented).

[2] *AD5235 Non-volatile memory digital potentiometers evaluation board user manual*. Analog Devices, 2003.

[3] *AD5235 non-volatile memory, dual 1024-position digital potentiometer*, Analog Devices, 2002.

[4] Kester, W. *Data conversion handbook*. Analog Devices, Newnes, 2005.

[5] *MCP6S2X evaluation board (Rev. 4), User's guide*. Microchip Tech., 2004.

[6] *MCP6S21/2/6/8 single-ended, rail-to-rail I/O, low gain PGA*, Microchip Tech., 2003.

[7] Molina J. *Digitally programmable, time-continuous active filter*, Application note: AB-062 Burr-Brown, 1994.

[8] *LTC1060 Universal dual filter building block*, Linear Technology, 2000.

[9] *MAX260/1/2 microprocessor programmable universal active filter*, Maxim, 2002.

[10] *AD9833 low power programmable waveform generator*. Analog Devices, 2003.