SELECTION OF CAPACITIVE SENSOR INTERFACE FOR HIGH-PRECISION APPLICATION

Sergiy Ulyashyn, Stoyan Nihtianov

Electronic Instrumentation Laboratory, TU Delft, Mekelweg 4, 2628CD Delft, Netherlands,
Phone: +31(0) 15 2786285, e-mail: s.v.ulyashyn@tudelft.nl

In this paper some specific problems, related to the electronic interface of capacitive sensors for high-precision applications, are discussed. A selection of the most optimal capacitive sensor interface (CSI) circuits, based on literature sources and technical reports, is presented. The selection is based on a large number of scientific papers, books and development documents. Because of the limited space only a few, easy to reach sources, are given in the reference list.

Keywords: capacitive sensor interface, high-precision application, non-linearity

1. INTRODUCTION

The most important part of any positioning system is the displacement sensor, which converts the position of the target to electrical signal. The currently used sensor systems can hardly fulfill the specification set for many advanced applications. Only laser interferometers, interferometric optical encoders and capacitive sensors come close in performance to those challenging specifications. Unfortunately, the commercially available capacitive sensors have a high thermal drift and a limited dynamic range. Therefore a research project on a low-power, low-drift, high-resolution capacitive sensor has been started[1].

2. SPECIFIC PERFORMANCE REQUIREMENTS

The most important application-specific requirements of the capacitive sensor interface (CSI) are listed bellow:

Standoff between electrodes	(100 ± 50) μm
Measurement range[2]	± 1 μm
Resolution	< 10 pm
Bandwidth (measured signal)	> 100 Hz
Bandwidth (servo-control)	> 10 kHz
Group delay	< 12 μs
Power dissipation[3]	< 10 mW

[1] The research work is supported by the Dutch Foundation of Technical Sciences (STW).

[2] The actual measurement range (displacement) is only ±1 μm. The big standoff is due to the mechanical mounting tolerance and the lifetime drift of the capacitive sensor head (CSH).

[3] This limitation is valid only for the CSI positioned in the CSH.

3. CLASSIFICATION CRITERIA FOR CAPACITIVE SENSOR INTERFACES

To be able to classify the huge variety of reported CSI solutions, the following classification criteria are used:

- **Type of connection between the sensor and the interface circuits.** The numerous different capacitive sensor interfaces can be divided into two groups – one-port and two-port interface. The difference in performance based on these two types is discussed.
- **Source of the excitation signal.** The capacitive sensors need an excitation signal, because they are passive type of sensors. The excitation signal can be delivered in two ways – from an external source, or by the interface circuits itself (a self-oscillating interface).
- **Waveform of the excitation signal.** There are two ways to measure capacitance. One way is to measure the reactance related to the capacitance, which is frequency dependant and needs sinusoidal excitation signal. Another way to measure capacitance is by measuring the charge, which can be stored in it, for a given applied voltage, or for an applied constant current for a fixed period of time. With this method it is useful to use square- or triangle waveform of the excitation signal.
- **Sensor construction.** Usually capacitive sensors use only two electrodes (plates). In this case one capacitance per sensor has to be measured. In some cases, where, for example, the influence of the environment variations has to be reduced, more complex constructions are used, which can be electrically represented with two or more capacitors. Typically, in this case the ratio between the capacitance values is the information carrier. So, the sensor construction can be divided into two types: single and differential (more than one capacitor).

Some parameters of CSIs, which are extracted from diverse articles and technical reports, are presented in Table 1. The main goals of this effort are:

- To identify the critical values of the performance parameters of CSIs.
- To study what kind of CSI and what design methods are used by different developers to reach the specific requirements.

Table 1 A summary table of the performance level of the refereed CSIs.

Parameter	References (see the list at the end)					
	[1]	[2]	[3]	[4]	[5]	[6]
SNR, dB	120	82 – 122	103	83 – 127	108	34
Input range	3pF – 3μF	360aF – 1.2pF	50aF – 7pF	0.07aF – 0.15pF	1.1aF – 0.3pF	–
Conversion time, ms	7.5 – 75	10	20	100	40	1
Thermal drift, ppm/K	3	–	22	–	–	–

4. NON-LINEARITY ERROR FOR THE DIFFERENTIAL CSI

A simple structure of a differential CSH and its electrical equivalent are shown in Fig. 1. The differential type sensors have a great advantage: when properly interfaced, they have low-sensitivity to environmental changes and interference. A special attention is paid to the non-linearity error, as it decreases the performance due to the non-linear transfer function of CSI. By selecting the best CSI with linear transfer function, we can optimize the whole system performance.

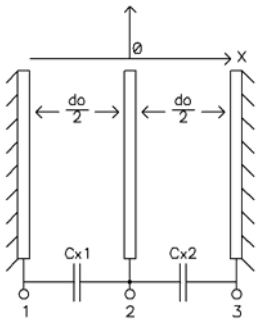

$$C_{x1} := \varepsilon \cdot \varepsilon_0 \cdot S \cdot \frac{1}{\frac{d_0}{2} + x}$$

$$C_{x2} := \varepsilon \cdot \varepsilon_0 \cdot S \cdot \frac{1}{\frac{d_0}{2} - x}$$

Fig. 1. Construction of a differential capacitive sensor C_x

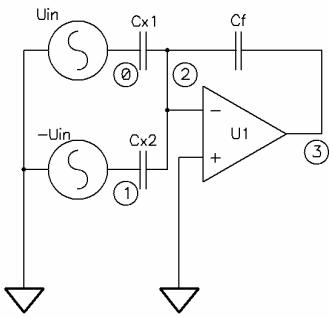

$$U_{out} := U_{in} \cdot \frac{C_{x1} - C_{x2}}{C_f}$$

$$U_{out} := U_{in} \cdot \frac{-2\,\varepsilon \cdot \varepsilon_0 \cdot S}{C_f} \cdot \frac{x}{\left(\frac{d_0}{2}\right)^2 - x^2}$$

Fig. 2. 1st CSI circuit with differential CSH

Advantages:	**Disadvantages:**
simple hardware realization	the transfer function is non-linear
possible electrical zoom-in procedure	high-sensitivity to environmental changes (P, T, H)
low-sensitivity to parasitic capacitance	

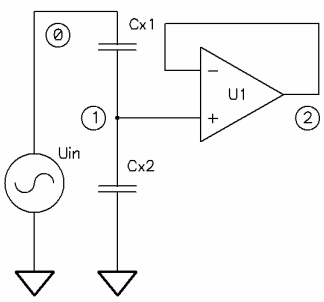

$$U_{out} := U_{in} \cdot \frac{C_{x1}}{C_{x1} + C_{x2}}$$

$$U_{out} := U_{in} \cdot \left(\frac{1}{2} - \frac{x}{d_0}\right)$$

Fig. 3. 2nd CSI schematics with differential CSH

Advantages:	**Disadvantages:**
simple hardware realization	high-sensitivity to cable and stray capacitance
the transfer function is linear	difficult to realize electrical zoom-in procedure
low-sensitivity to P, T, H	

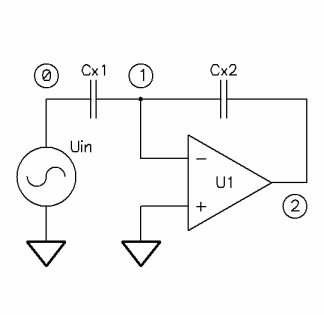

$$U_{out} := -U_{in} \cdot \frac{C_{x1}}{C_{x2}}$$

$$U_{out} := U_{in} \cdot \frac{x - \frac{d_0}{2}}{x + \frac{d_0}{2}}$$

Fig. 4. 3rd CSI schematics with differential CSH

Advantages:	**Disadvantages:**
simple hardware realization	high-sensitivity to cable and stray capacitance
low-sensitivity to P, T, H	difficult to realize electrical zoom-in procedure
	The transfer function is non-linear

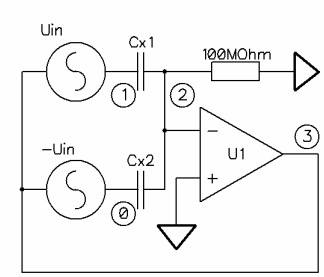

$$U_{out} := U_{in} \cdot \frac{C_{x1} - C_{x2}}{C_{x1} + C_{x2}}$$

$$U_{out} := U_{in} \cdot \frac{-2 \cdot x}{d_0}$$

Fig. 5. 4th CSI schematics with differential CSH

Advantages:	**Disadvantages:**
simple zoom-in procedure	difficult hardware realization
low-sensitivity to P, T, H	
low-sensitivity to cable and stray capacitance	
The transfer function is linear	

The non-linearity error for the first CSI is calculated (the 2nd and the 4th SPI are linear and 3rd SPI is less used). The results of the calculated error presented.

Conclusion: for a measurement displacement range ±1μm the non-linearity error is not compatible with the input requirements.

Gap between plates:

100µm

Dynamical range:	Error:
±1µm	≈160ppm
±10µm	≈160ppm
±80nm	≈1ppm

Fig. 6. Non-linearity error for measurement range ±1µm

5. INFLUENCE OF THE CABLE STRAY CAPACITANCE TO THE CSI PERFORMANCE

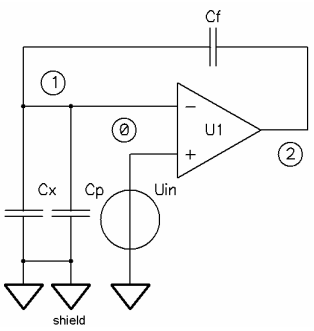

$$U_{out} := U_{in} \cdot \left(1 + \frac{C_x}{C_f}\right)$$

$$\delta_c := \frac{-C_p}{C_x + C_f} \cdot 100\ \%$$

Fig. 7. One-port CSI with stray (parasitic) cable capacitance

Input specification: C_x = 10pF, C_f = 1pF, C_p = 100pF (1m cable).
Results: The error caused by the cable capacitance exceeds 1000%.
Conclusion: For any reasonable set of requirements, it is impossible to use this circuit without taking additional measures. Most often a bootstrapping is used of the cable capacitance.

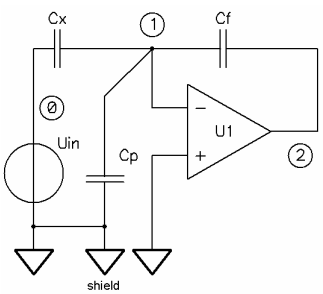

$$U_{out} := -U_{in} \cdot \frac{C_x}{C_f}$$

$$\delta_c := \frac{1}{1 + \frac{C_f \cdot A}{C_f + C_x + C_p}} \cdot 100\ \%$$

Fig. 8. Two-port CSI with stray (parasitic) cable capacitance

Input specification: C_x = 10pF, C_f = 1pF, C_p = 100pF (1m cable) and A (gain) = 10^4.
Results: The error from the cable capacitance is 1%.
Conclusion: for low-cost applications this error value is quite acceptable, but not for high-precision applications.

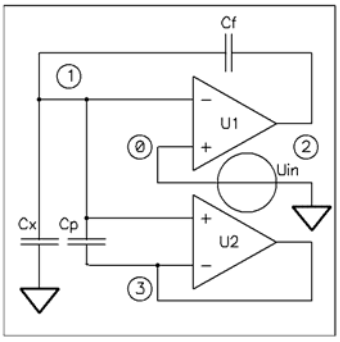

$$U_{out} := U_{in} \cdot \left(1 + \frac{C_x}{C_f}\right)$$

$$\delta_c := \frac{f(U_{in}, \psi)}{U_{in}} \cdot \frac{C_p}{C_x + C_f} \cdot 100\ \%$$

Fig. 9. One-port CSI with bootstrapping circuit

Input specification: C_x = 10pF, C_f = 1pF, C_p = 100pF (1m cable) and Ψ (phase shift between notes 1 and 3) = -2.6nrad.

Results: The residual error caused by the cable capacitance is 0.03ppm.

Conclusion: This result is compatible with our requirements. Unfortunately, the use of bootstrapping requires very careful design, because otherwise it can easily cause instability problems.

6. CONCLUSION

In this paper some aspects of high-precision design of capacitive sensor interface are discussed. It seems possible to improve the performance level of some existing sensor interfaces (for example, the circuit in Fig.5) to meet the targeted performance requirements. An important next step is to make the right choice of the measurement method and the type of interface.

7. REFERENCES

[1] I.Zoltan, O.Zoltan, *High-speed impedance measurement of high accuracy*, ACTA IMECO 1985, pp 299 – 305.

[2] M.Gasulla, X.Li, G.C.M.Meijer, L.Ham, Jo.W.Spronck, *A contactless capacitive angular-position sensor,* IEEE Sensors journal, vol.3, No.5, October 2003, pp 607-614.

[3] F.M.L.Goes, J.Mulder, G.C.M.Meijer, *A novel low-cost universal three-terminal universal sensor interface,* IMTC 1995, pp 335-338.

[4] X.Li, G.C.M.Meijer, *A novel smart resistive-capacitive position sensor,* IEEE Transaction on instrumentation and measurement, vol.44, No.3, June 1995, pp 768-770.

[5] G.Jong, G.C.M.Meijer, K.Lingen, *A smart capacitive absolute angular-position sensor,* Sensors and actuators A, 41-42 (1994), pp 212-216.

[6] M.A.Atmanand, V.J.Kumar, V.G.K.Murti, *A novel method of measurement of L and C,* IEEE transactions on instrumentation and measurement, vol.44, No.4, August 1995, pp 898-903.