DESIGN OF *RLC* TO FREQUENCY CONVERTER

Ivan Iliev Stoyanov, Georgi Todorov Nikolov, Boyanka Marinova Nikolova

Faculty of Electronics and Technologies, Technical University of Sofia, Studenstki Grad, 1797, Sofia, Bulgaria, e-mail: ivansto@tu-sofia.bg, gnikolov@tu-sofia.bg, bnikol@tu-sofia.bg

This application specific paper describes a design approach for RLC to frequency converter based on relaxation oscillator techniques. The designed circuit is proposed to convert resistive, inductive and capacitive values into corresponding frequency. The design process is accomplished using electronic design automation environments. Using simulation technique, RLC to frequency transfer functions are derived and presented graphically. Simulated results are compared with measured data generated from realized prototype circuit. Such design approach lets significantly simplify the design process, facilitate prototyping and reduce time-to-market in order to produce low-cost measurement systems or sensor platforms with fair metrological performances.

Keywords: Frequency Conversion, Relaxation Oscillator, *RLC* Measurement, Sensor Platforms, SPICE Simulation.

1. INTRODUCTION

There are many different methods and techniques for measuring resistance, capacitance and inductance [6]. In recent years methods based on oscillator that convert resistance, capacitance or inductances into frequency are growing up with more popularity especially for sensor application [2, 3, 7, 8].

It is well known that oscillators are fundamental circuit building blocks. Although various techniques are common, a simply applied, broadly tunable oscillator with good accuracy widens the design possibilities of many of these circuits. Quartz crystals and ceramic resonators offer high initial accuracy and low drift but are essentially not tunable over any significant range [7]. Typical *RC* types have lower initial accuracy and increased drift but are easily tunable over broad ranges. The device's combination of simplicity, broad tuning range, and good accuracy invites use of *RC* oscillators in many sensor and instrumentation circuitry.

Relaxation oscillators offer several advantages over the constant current and voltage sensing circuits. The main advantage of the oscillator is that an analog to digital converter is not required. Another key attribute of oscillators is that these circuits can produce an accuracy and resolution that is much better than an analog output voltage circuit. The accuracy of the oscillator's frequency measurement is limited only by the accuracy of the universal counter used. It is well known that there are many low cost frequency measurement instruments with accuracy better than 10 ppm. A negative feature with oscillators is that they can be difficult to troubleshoot and may not oscillate under all conditions. For this reason designers are often reluctant to use oscillators due to their lack of familiarity with these circuits. However, the state variable and relaxation oscillators provide very robust start-up oscillation characteristics.

This presentation shows how to design an oscillator circuit using National Semiconductor's low-cost LM311 comparator. An oscillator circuit is intended to provide resistance, capacitance and inductance measurements. The circuit can be used with resistive, capacitive and inductive sensing elements to provide measurements of various physical phenomena such as temperature, humidity, pressure, displacement etc. In addition a frequency output of oscillator is easily integrated into a data acquisition and microcontroller system.

2. RELAXATION OSCILLATOR WITH COMPARATOR

There are many references and application notes that describe various oscillator circuits in details [2, 3, 4, 7]. In this paper the design equations for the single comparator relaxation oscillator will be determined, considered and presented.

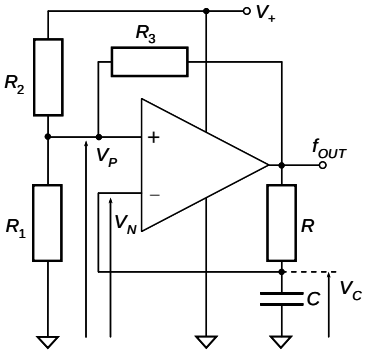

Fig. 1. Relaxation oscillator

2.1 *RC* relaxation oscillator

The relaxation oscillator shown in fig. 1 is an oscillator circuit using comparator and operates from single supply. This circuit provides a relatively simple and inexpensive solution, as the circuit topology requires a single comparator, a capacitor and a few resistors. The oscillator outputs a square wave with a frequency proportional to the change in the resistance R or capacitor C. The analysis of this circuit can be done by assuming that during power-up, the comparator output voltage is railed to the positive supply voltage (V_+). The voltage at V_P of the comparator becomes a switching or trip voltage to toggle the output to ground as the voltage across the capacitor C charges. Therefore, the comparator swings the output voltage to the rails, every time the capacitor voltage passes the trip voltage. In real cases, the output stage of comparator does not exactly reach the supply rails, V_+ and ground. This is specified as high (V_{OH}) and low (V_{OL}) level output voltage. Therefore, the capacitor C and the trip voltages at the non-inverting input are driven by the V_{OH} and V_{OL} instead of V_+ and 0 V. Therefore the trip voltage at V_P, which triggers the output to swing from V_{OH} to V_{OL} or from V_{OL} to V_{OH}, is referred to as V_{THL} and V_{TLH}, respectively. The output frequency f_{OUT} relates to the time that the capacitor charges and discharges through V_{OH} and V_{OL}. The voltage across a capacitor changes exponentially, as shown below [1]:

$$V_C(t) = V(t \to \infty) + [V(t=0) - V(t \to \infty)]e^{-\frac{t}{RC}} . \tag{1}$$

As the capacitor charges and discharges up to the trip voltages V_{THL} and V_{TLH}, the relationship (1) can be used to calculate the oscillation frequency. In this case $V_C(t) = V_{THL}$, $V(t \to \infty) = V_{OH}$ and $V(t=0) = V_{TLH}$. V_{THL} and V_{TLH} are set by R_1, R_2 and R_3 according equations:

$$V_{THL} = V_{OH}\left(\frac{R_1 \| R_2}{R_1 \| R_2 + R_3}\right) + V_+\left(\frac{R_1}{R_1 + R_2}\right)\left(\frac{R_3}{R_1 \| R_2 + R_3}\right), \tag{2}$$

$$V_{TLH} = V_{OL}\left(\frac{R_1 \| R_2}{R_1 \| R_2 + R_3}\right) + V_{+}\left(\frac{R_1}{R_1 + R_2}\right)\left(\frac{R_3}{R_1 \| R_2 + R_3}\right). \quad (3)$$

The next equations substitute the variables from (2) and (3) in the capacitor equation (1) to solve for t and calculate the charging (t_{ch}) and discharging (t_{dch}) times. When C is charged through V_{OH}:

$$t_{ch} = RC\ln\left(\frac{V_{THL} - V_{OH}}{V_{TLH} - V_{OH}}\right). \quad (4)$$

When C is discharged through V_{OL}:

$$t_{dch} = RC\ln\left(\frac{V_{THL} - V_{OL}}{V_{TLH} - V_{OL}}\right). \quad (5)$$

Finally, the output frequency can be solving by equation:

$$f_{OUT} = \frac{1}{t_{ch} + t_{dch}} = \frac{1}{RC\left[\ln\left(\frac{V_{THL} - V_{OH}}{V_{TLH} - V_{OH}}\right) + \ln\left(\frac{V_{THL} - V_{OL}}{V_{TLH} - V_{OL}}\right)\right]}. \quad (6)$$

Must be appointed that, the input offset voltage (V_{OS}) and the input bias current (I_B) terms of the comparator is ignored for simplification.

An error analysis is a useful tool to estimate the accuracy of designed relaxation oscillator. Detailed error analysis of similar circuit is done in [2]. In this reference the non-ideal characteristics of a comparator, V_{OS}, I_B, output current limit and its effect over V_{OH} and V_{OL} are explained. According consideration done in this application note, a major limitation in the inaccuracy of the relaxation oscillator is the comparator's output current drive capability. As oscillation frequency depends on R but this R is also used to limit the comparator sink and source current. For this reason the authors recommended that the maximum sink or source current from the comparator be less than one-fifth of the output short circuit current. The detailed consideration in [2] maintains that, the V_{OS} and the I_B current of the comparator have relatively minimal effect over the circuit accuracy. Contrariwise, the magnitude of resistor R and capacitor C also has an effect on the comparator output voltages V_{OH} and V_{OL} that affect frequency, assuming the change in V_{OH} and V_{OL} are not symmetrical.

2.2 *RL* relaxation oscillator

In contrast to *RC* relaxation oscillator, the *RL* circuit has vastly less popularity. The circuit of *RL* relaxation oscillator is obtaining from the circuit of *RC* oscillator, shown in fig. 1, by replacing the resistor R with an unknown coil L and the capacitor C with a resistor R. Using the equation for series connected R–L circuit representing induced voltage across resistor R [1] and implementing the same approach for *RC* oscillator the output frequency can be derived as follow:

$$f_{OUT} = \frac{R}{L\left[\ln\left(\frac{V_{THL} - V_{OH}}{V_{TLH} - V_{OH}}\right) + \ln\left(\frac{V_{THL} - V_{OL}}{V_{TLH} - V_{OL}}\right)\right]}. \quad (7)$$

Assuming that mentioned effects are taking into consideration in modern electronic design automation (EDA) environment, in present paper is presented approach for relaxation oscillator circuits design based on SPICE simulations.

3. Simulation of Relaxation Oscillator

3.1 Component selection and restriction

Oscillators are relatively immune to DC specifications like offset voltage and bias current, making the **comparators** a good design choice for precision sensing circuits. However the non-ideal characteristics of a comparator will produce an error in the expected oscillation frequency. The offset voltage, input bias current, propagation delay, rise/fall time and output current limit have an effect on the oscillation frequency. In order to illustrate the design approach in present paper the well-known National Semiconductor's comparator LM311 is selected. It has relatively low input currents and offset voltage and can drive loads, at currents as high as 50 mA. Since the comparator is very popular it has detailed macromodel, describing the behavior of the device for many aspects. The accuracy of the relaxation oscillator can be improved by using a higher performance comparator. However, the trade-off will be that the comparator's current consumption will be much higher.

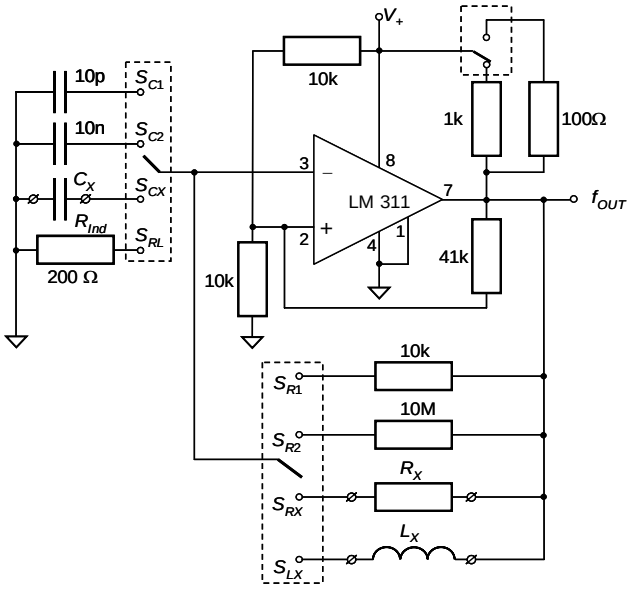

Fig. 2. Circuit of RLC to frequency converter

Selecting precision components can minimize the errors of the resistors. Metal film and foil resistors are two types of precision resistors that can be used. Though the change of the ambient temperature is usually unavoidable; however, the power rating of a resistor can be chosen to minimize any self-heating. Other factors, such as humidity, voltage coefficient and thermal EMF are small and can be neglected by using quality components and standard low noise analog PCB layout procedures.

Capacitors have relatively poor performance when compared with resistors and are usually the com-ponent that limits the accuracy of an oscillator. A capacitor with a tight tolerance, low temperature coeffi-cient and small drift rate is available only in a maximum capacitance of approximately 100 nF. The relatively poor specifications of a microfarad-range capacitor limit the accuracy of the relaxation oscillator. The major environmental error term of a capacitor is due to temperature hysteresis and is specified as the retrace error. A multi-layer or stacked ceramic is the recommended capacitor for the relaxation oscillator. Other types of capacitors available in a range of approximately 1 µF include tantalum and metallized polypropylene film.

3.2 Design of circuit for *RLC* to frequency conversion

The designed circuit proposed to convert *R*, *L* and *C* values into corresponding frequency is shown in fig. 2. The circuit has three operation modes: "*C* Measurement" is the first mode and it is divided in two measurement ranges. The low range is from 5 pF to 10 nF and it is achieved by turning switches S_{CX} and S_{R2} on. The all rest switches must be turned off. In this case the simulated results are shown in fig. 3*a*. The second range is when the switches S_{CX} and S_{R1} are turned on and the measured capacitance is from 10 nF to 10 μF. The simulated transfer function for this range can be seen in fig. 3*b*.

The same approach is applied for the "*R* Measurement" mode. There are two ranges – from 400 Ω to 400 kΩ (switches S_{RX} and S_{C2}) and from 400 kΩ to 30 MΩ (switches S_{RX} and S_{C1}). The simulation results for the first range are shown in fig. 4.

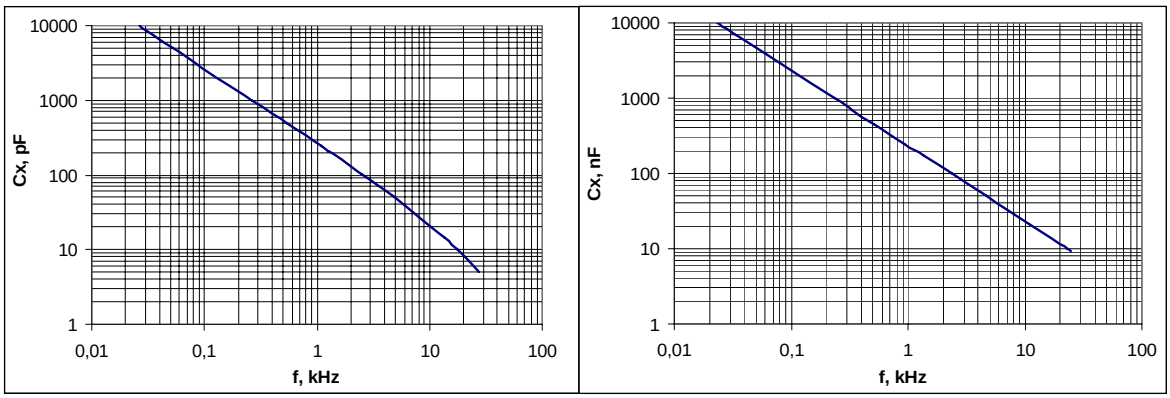

a) *b*)

Fig. 3. Simulated *C* to frequency transfer functions

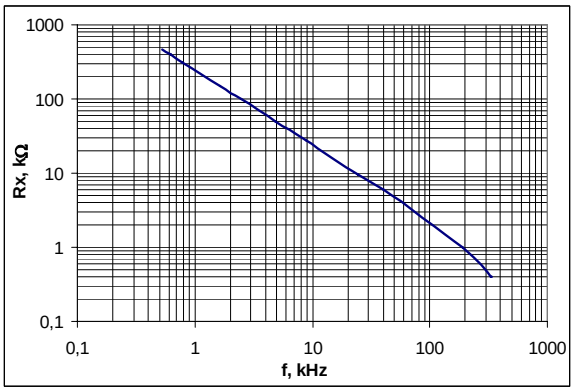

Fig. 4. *R* to frequency transfer function

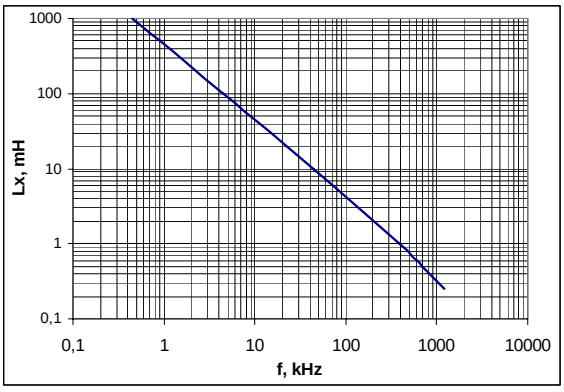

Fig. 5. *L* to frequency transfer function

In order to measure inductance the last mode "*L* Measurement" can be achieved by turning on the switches S_{RL} and S_{LX}. In this case the large output current from the comparator must be established. It can be realized by reducing the resistor connected to open collector from 1 kΩ to 100 Ω. The obtained results are shown in fig. 5.

The presented measurement ranges are selected by taking to account as the comparator's data sheets [4, 5] (especially for settling time and short circuit output current) as the parasitic circuit capacitance. To achieve automated change in measurement modes and ranges it is possible to realize the commutation switches using analog multiplexers (for instance 4-channel AD7502) or selectable single pole, double throw switches (like ADG786). However, the main requirements for the used

switching circuits are that they must have low values of the on resistance and parasitic capacitances and high value of the off resistance.

4. EXPERIMENTAL RESULTS

In order to verify the design the circuit prototype is done and generated frequency is measured using multifunctional data acquisition system. Comparison between simulated and measured data is done and the results are given in table 1. As can be seen the characteristics of designed circuit have good agreement with realized prototype (accuracy approximately 3 %).

Table 1. Comparison between simulation and measurement

C_X, F	**10.136 p**	**14.7 p**	**206.7 p**	**242.4 p**	**9.44 n**	**21.17 n**	**169 n**	**459.1 n**
Sim. *f*, Hz	17.79 k	13.597 k	1.25 k	1.092 k	24.47 k	10.98 k	1.38 k	508.83
Meas. *f*, Hz	17.02 k	12.675 k	1.266 k	1.082 k	24.03 k	10.92 k	1.33 k	494
Accuracy	4.52 %	7.27 %	1.26 %	0.92 %	1.83 %	0.55 %	3.76 %	3.00 %

R_X, Ω	**402.3**	**5.908 k**	**9.81 k**	**27.83 k**	**466.3 k**	**2.04 M**	**10.05 M**
Sim. *f*, Hz	331.77 k	40.05 k	24.48 k	8.75 k	529.02	77.42 k	17.79 k
Meas. *f*, Hz	297.3 k	39.29 k	24.03 k	8.51 k	504.5	77.42 k	17.02 k
Accuracy	11.59 %	1.93 %	1.87 %	2.82 %	4.86 %	0 %	4.52 %

5. CONCLUSION

The presented design of *RLC* to frequency converter, based on relaxation oscillation technique, offers a single comparator circuit for cost-sensitive applications. The used approach offers a simple solution for an application that needs the low cost determining of resistors, capacitors and coils, with fair measurement accuracy. The performed practical experiments illustrate good agreement between simulation and measurement. Although to increase accuracy a calibration and compensation techniques must be implemented. Designed circuit can be used for different applications concerning nominal values of passive component measurement, or physical phenomena observing by resistive capacitive and inductive sensors.

6. REFERENCES

[1] Bird J., *Electrical and Electronic Principles and Technologies*, Newnes, ISBN 0-7506-5778-2, 2003.

[2] Haile E., J. Lepkowski, *Oscillator Circuits For RTD Temperature Sensors*, Microchip Technology Inc., AN895, 2004.

[3] Sensor Platforms Inc., *SSP1492 Sensor Signal Processor Chip*, Product Datasheet, V2.0 – December 13, 2005.

[4] Widlar R., *Precision IC Comparator Runs from +5V Logic Supply*, National Semiconductor Corp., AN007303, 2002.

[5] National Semiconductor Corp., *LM111/LM211/LM311Voltage Comparator*, DS, 2004.

[6] QuadTech, Inc., *LM111LCR Measurement Primer*, P/N 030122/A3, July 2003.

[7] Williams J., *A clock for all reasons, part 1: Monolithic oscillator invigorates instrumentation applications*, Linear Technology Corp., Design Feature, June 2003.

[8] Yurish S., *Precision Data Acquisition Systems for Quasi-Digital Temperature Sensors Based on Universal Frequency-to-Digital Converter*, S&T Digest, July 2005, Vol. 57, Issue 7.