FPGA SIMULATION OF PULSE IONIZING SENSORS AND ANALYSES OF DESCREET - FLOATING ALGORITHM

Cvetan V. Gavrovski, Zivko D. Kokolanski

Department of Electrical Engineering
The St. Cyril and Methodius University, P.O.Box 547, 1000 Skopje
Republic of Macedonia
cvetang@ukim.edu.mk; zivko.kokolanski@ukim.edu.mk

In the presented paper is described a system for simulation of simple pulse ionizing sensors implemented in FPGA processor and analyses of descreet-floating algorithm are being made. Due to stochastic nature of radiation simulation of the sensors are made using random bit sequence generator implemented with linear feedback shift registers and additional correcting circuits. Simulations of the pulse ionizing sensors are further used for testing the descreet-floating algorithm and for calculation the dose rate of ionizing radiation. PC using serial RS232 communication does analyses of the algorithm. Hardware and software realization is presented which measure the dose rate in real time. The system can also be supplied with real pulse detector unit.

Keywords: dose rate, pulse ionizing sensors, descreet-floating algorithm

1. INTRODUCTION

Quality of measuring the intensity of ionizing radiation using simple pulse detectors corresponds with processing of measuring signal. Information parameter of pulse detector's signal is the number of pulses in a time unit. It is evident that obtaining the average value in fixed measuring interval corresponds to the dose rate of ionizing radiation, and is normally to expect that obtaining the average value in unlimited interval will produce lower errors. But thinking in that way is practically unacceptable and is valid only if the dose rate is constant or slow changeable. From these reasons the signal processing is necessary, especially when they are used for dosimetric purposes.

Analyses of ionizing radiation by using real sources of radiation often can be very dangerous and ask for using strict safety precautions which additionally complicates the measurements. Simulations of the pulse ionizing sensors using digital circuits can be very useful especially for testing in laboratory environment. In this paper Altera EPF10K70 FPGA processor is used for simulation of pulse ionizing sensor.

The EPF10K70 device is based on SRAM technology and has 3,744 logic elements and nine embedded array blocks. Each logic element consists of a four-input look-up table, a programmable flip-flop and dedicated signal paths for carry and cascade functions. Each embedded array block provides 2,048 bits of memory, which

can be used to create RAM, ROM or FIFO functions, and also can implement logic functions such as multipliers, micro controllers, state machines and DSP functions.

2. SIMULATION OF PULSE IONIZING SENSORS

The output signal of pulse ionizing detectors is a result of interaction between ionizing radiation and the active volume of detector. Because of the lower effectiveness of pulse detectors their output signal is related to *Poasson*. According to the stochastic nature of radiation the adequate simulation to the signal of pulse ionizing sensors are pseudo random noise generators.

Though the mathematics behind random noise generators, code can be extremely complicated, the linear feedback shift registers (LFSR) implementation can be relatively simple. A typical LFSR consists of a chain of registers and a XOR gate. An LFSR with "n" registers can sequence throw $(2^n - 1)$ states.

Any LFSR can be represented as a polynomial of variable X:

$$G(X) = g_m X^m + g_{m-1} X^{m-1} + \ldots g_2 X^2 + g_1 X + g_0 \qquad (1)$$

g – tap weights,

m – number of LSFR stages

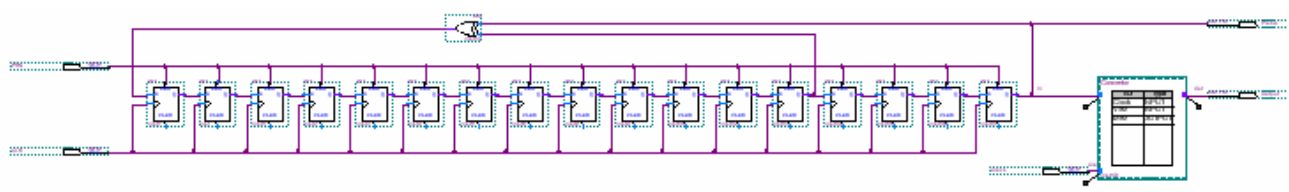

Fig1. Random bit sequence generator

Implementation of random bit sequence generator is shown on Fig1 using linear feedback shift registers and additional correcting circuits.

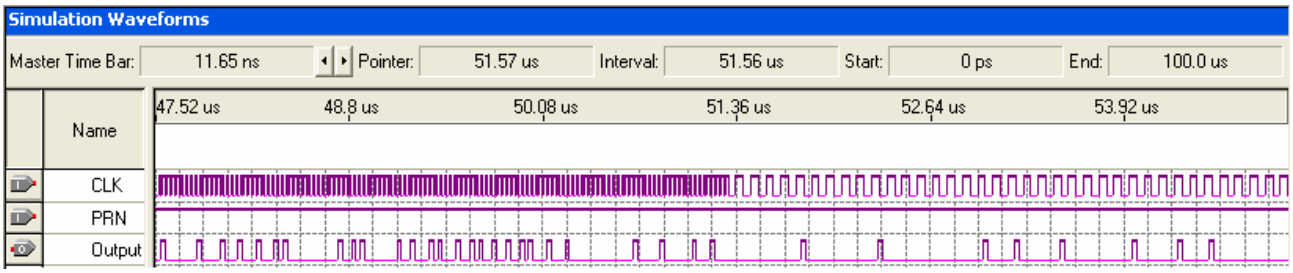

Fig2. Random bit sequence generator simulations

From the simulation waveforms (Fig2) we can clearly see that the rate of generated pulses (corresponding to the dose rate) is proportional to the clock rate i.e. rate of the random generated pulses can be indirectly controlled.

The random bit sequence generator is practically realized using Altera EPF10K70 FPGA processor programmed with VHDL.

3. ANALYSES OF DESCREET FLOATING ALGORITHM

The first steps during actions for signal processing is treatment of the registered pulses for appropriate measuring interval and duration of the measuring interval. Treatments of the pulses from detector unit depend of the chosen algorithm, finding the average value in fixed measuring interval or averaging in variable measuring interval. For constant frequency of the input pulses the accuracy raises with increases of the measuring interval, opposite if deviations of the dose rate appear a completely wrong result will be obtained. The solution is in extending of the averaging interval until the average value of the input pulses is constant. If variations of the dose rate appear then the averaging interval stops, the measuring system resets and the measuring procedure starts over.

The descreet-floating algorithm is related on dividing the optimal fixed measuring interval to a whole number of subintervals. We define maximum allowed deviation on the input pulses between two subintervals. The deviation is periodically checked on the end of each subinterval. In case of overloading of the maximum allowed deviation the averaging interval stops, the measuring system resets and the procedure starts over.

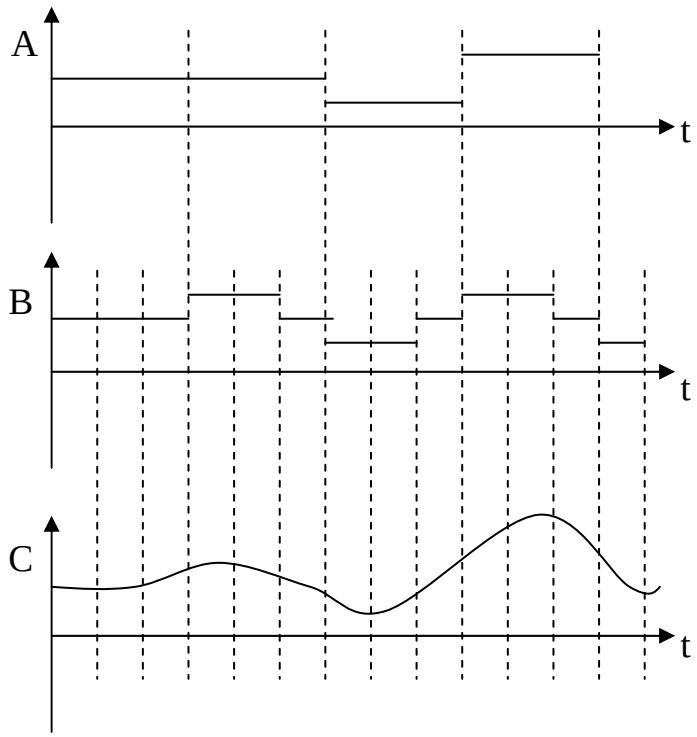

Fig3. Comparison of different measuring algorithms
A – Dose rate of ionizing radiation (fixed measuring interval)
B – Dose rate of ionizing radiation (descreet – floating algorithm)
C – Dose rate of ionizing radiation

The advantage of the descreet-floating algorithm is in requirements of simple systems for calculations in order of the variable algorithm.

If we analyze the equations:

$$T = \frac{1}{n \cdot \delta_k^2} \qquad (2)$$

$$T = k \cdot \Delta T \qquad (3)$$

n – average value of the pulses in time unit ΔT
T – measuring interval

From (2) it can be clearly seen that the measuring interval depends of the defined relative error. That means that the measuring time for constant relative error should be magnified in relation of decreasing the average value of pulses (n) in time unit.

From practical point of view it means that during measurements of higher intensity sources of radiation the measuring interval is shorter for defined relative error in relation of measurements of lower intensity sources where measuring interval should be enlarged. Here we find difficulties in defining the proper duration of the subintervals of the descreet-floating algorithm.

4. PRACTICE REALISATION AND RESULTS

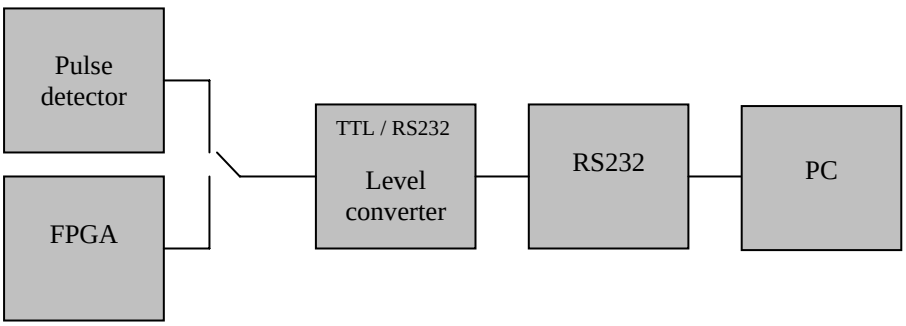

Fig4.Block diagram of the realized system

Altera EPF10K70 FPGA processor is used for simulation of the radiation source. Function generator can control the FPGA output pulse rate and simulate different radiation intensity. The pulses obtained from the FPGA are leaded to serial RS232 port of the PC through TTL / RS232 level converter. PC does analyses and comparison of fixed and descreet-floating algorithm. The system can also be supplied with real pulse detector unit in which case the FPGA processor is switched off.

Fig5. Software realization

On Fig5 a measuring sample from the simulated source of radiation is presented. The results are obtained using constants for linearising the characteristic of the sensor ZP1400PH. The parameters for both analyzed algorithms can be software changed such as: measuring interval, measuring subinterval and maximal deviation.

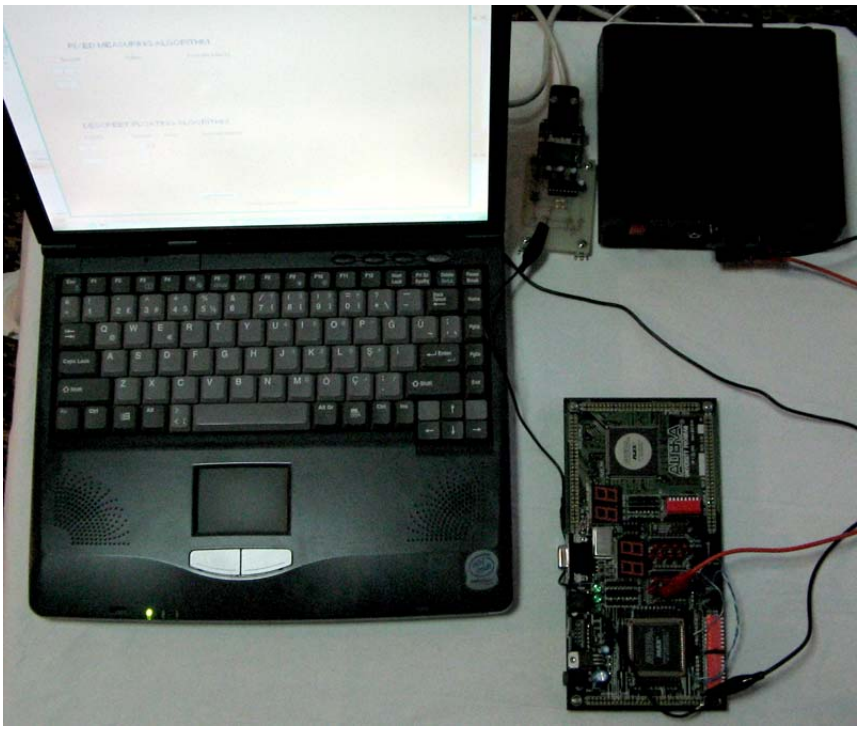

Fig6. Hardware realization of the system

5. CONCLUTION

The analyses of the descreet-floating algorithm showed that it has some advantages and some disadvantages compared with variable and fixed measuring algorithm. The results obtained using this algorithm for slow changeable dose rate makes nearly equal error in order of the fixed measuring algorithm. The variable algorithm always shows better results then descreet – floating algorithm, but also it requires more complicated system for calculations. The main problem of the presented algorithm is obtaining the optimal subinterval for high level and low level intensity of radiation.

In practice it is not simple to obtain algorithm without shortage because of specific limitations linked with the specific character of the phenomenon. Because of these reasons before accepting concrete software realization computer analyses and experimental tests are necessary using real sources of radiations.

6. REFERENCES

[1] Cvetan V. Gavrovski, Ratcho M. Ivanov: *Limits of measurement range of pulse detectors for ionizing radiation*, Fifth Scientific Conference, Electronics'96, Proceedings of the Conference, Book 1, Published by TU Sofia, Bulgaria and TU Delft, The Netherlands, 1996, pp. 70–75.

[2] Cvetan V. Gavrovski, Mario A. Makraduli, Josif G. Kosev: *"Microcontroller based portable dosimeter for x and gamma radiation"* The Eight Scientific and Applied Conference, Electronics' 99, Published by TU Sofia, Bulgaria and TU Delft, The Netherlands, vol. 1, pp. 72–78, September 1999

[3] University Program Design Laboratory Package User Guide – Altera Corporation, USA

[4] Mark Zwolinsky: Digital System Design With VHDL, 2nd Edition, 2003.