NOVEL DEVICE FOR THICK-FILM ELECTROCHEMICAL SENSORS AND BIOSENSORS MEASUREMENT

Jan Prasek, Martin Adamek

Dept. of Microelectronics, Brno University of Technology, Brno, Udolni 53, 602 00 Brno, Czech Republic, phone: +420 541 146 136, email: prasek@feec.vutbr.cz

This work deals with thick-film sensors electrodes properties study during their fabrication process, which is crucial question for the next development of this perspective technology. New electrochemical analytical device was developed to ensure a defined mass transport to the electrodes, which is the most limiting process that influences the response quality of the sensor. The device is possible to be used for measurement on final chemical sensors or biosensors too. The sensors current responses were tested on a standard electrochemical couple of potassium ferrocyanide-ferricyanide. Thick film sensor's response dependence on the liquid velocity and geometrical arrangement is presented.

Keywords: thick-film sensor, flow analysis, cadmium

1. INTRODUCTION

Miniaturization and integration of chemical devices into modules that are dimensionally comparable with electronic chips (Lab on Chip) is nowadays trend. These devices are capable for work with minimal amounts of chemicals. Hereby they enable wide use of methods that are utilizing expensive chemicals such as enzymes, antidotes or hormones. These devices are commonly used for processes detection, selective electrolysis, electrophoresis or similar techniques.

New types of generally solid electrodes are necessary for new technologies contrary to classical electrochemical analysis, which commonly used mercury drop electrodes [1]. Solid electrodes can be fabricated using thick film technology (TFT) process [2]. The advantage of TFT is its flexibility, production cost, good reproducibility and good electrical and mechanical properties of the electrodes. The crucial advantages is low cost of electrodes (e.g. platinum electrode containing 1 mg of Pt) that enable to use of electrodes for few numbers of analyses only and big variability of used materials that do not use classical metals only (Pt, Au, Ag) but it is possible to prepare semi conductive materials, magnetic electrodes and finally it is possible to ensure reproducible nanostructure of electrodes [3]. The aim of our work is to find effective way for study of TFT sensors electrode properties during sensors fabrication process, which is crucial question for next development of this perspective technology.

Final electrochemical electrodes properties are not given by their topology and chemical composition only but correlation of electrode reactions with technology of electrodes preparation is appeared. Appropriate method that could enable the study of TFT sensors electrodes substrates and their electrodes reactions was not described yet. The mass transport intensity from volume of solution to electrode surface and

technical arrangement that enables direct and simple realization of appropriate hydrodynamic conditions are the crucial factors.

2. EXPERIMENTAL

2.1 New device principle

In our previous work [4] an idea of use of new electrochemical analytical device (fig. 1) for TFT electrodes and sensors testing was presented.

The device is equipped with exchangeable rotating vessel for sample solution and static holder with connector for exchangeable TFT sensor.

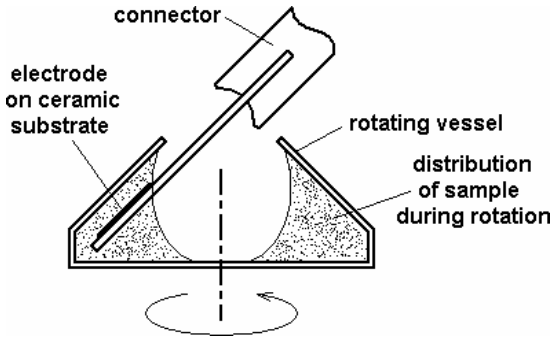

Fig. 1 New analytical device with rotating vessel principle.

The device can use TFT sensors (fig. 2, 3) without any adaptation and it is possible to do sensor tests during technology process of its fabrication. It is possible to take the TFT sensor out of the device and then continue with deposition of next materials on the electrode surface. This is not possible in case of rotating disk electrode arrangement. The new device can use electrode arrays that allow simultaneous analysis processing of more species.

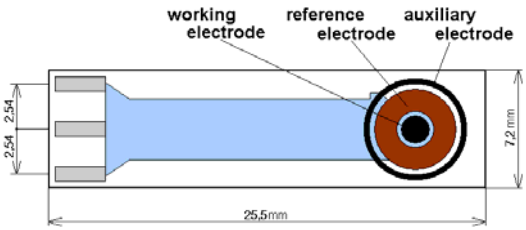

Fig. 2 Standard TFT sensor

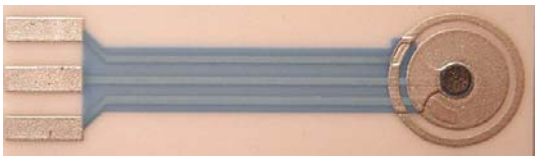

Fig. 3 Real sample of TFT sensor

The main advantages of this solution are the possibility of integration of complex electrode design (electrode arrays), exactly defined hydrodynamic conditions, easy electrodes exchanging, ensuring of device purity is achieved by exchanging of all contaminated components, smoothness of electrode is achieved by proper electrode choose and small amount of analyzed solution. Disadvantages of this device are the dependence on constant rotation speed and rotating vessel vibrations (these problems

were partially solved by new device prototype in this work) and difficult implementation of inert atmosphere (it can be solved by construction if necessary).

We presume that when the sensor is placed closely to conic wall of the rotating vessel, well and reproducible defined flow should be arisen in liquid layer between the wall and the TFT sensor (on the sensor's electrode surface).

2.2 Device prototype

For the practical tests and measurements the improved prototype of new electrochemical analytical device (figure 4) that ensures the vessel vibration problem mentioned in [4] improvement was made. The vibration influence was partially suppressed by better construction design and better fabrication accuracy. The vessel diameter is two times bigger than it was in previous prototypes, so the tip speed is the same with lower angular velocity. It also decreases a noise that was caused by vibrations.

This prototype is equipped with rotation speed measurement that ensures reproducible conditions during each separate analytical measurement. The rotation speed regulation is not necessary due to low hydraulic friction (the rotations are constant for all measurement). This prototype also allows the fine 3-axis positioning of the sensor in vessel (fig. 5). This is an advantage in case of use of different types of sensors which can have different optimal measurement conditions.

Fig. 4 Improved prototype of new electrochemical device.

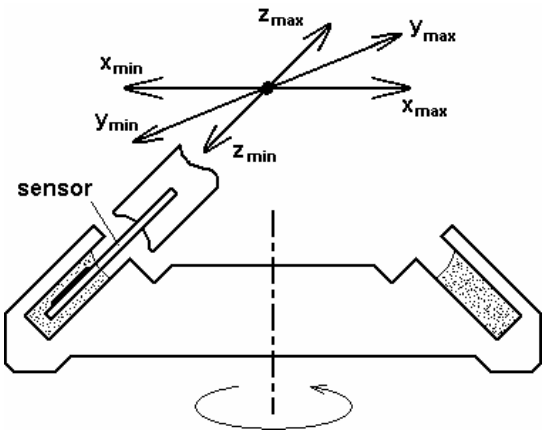

Fig. 5 Fine 3-axis positioning of the sensor.

2.3 Electrochemical experiments

Prepared TFT sensor was fitted into rotating vessel connector holder according to figure 5 and then placed into rotating vessel cell with potassium ferrocyanide-ferricyanide solution. The TFT sensor was connected to analytical potentiostat PT050 (Radiometer analytical) as three-electrode system. All TFT sensor measurements were performed using DC cyclic voltammetry in range of potentials from -550 mV to

+650 mV with 25 mV/sec scan rate. Each sensor was stabilized by five voltammetric cycles before start of every experimental measurement.

There were made several experiments with the rotation speed changing and suitable position of the sensor finding. The main emphasis was on the best current response with low noise of tested type of sensor.

Other experiments were done on other types of commonly used electrochemical arrangements for comparison (non stirred cell, stirred cell, channel electrode cell with peristaltic pump, channel electrode cell with microperistaltic pump, Micro Flow system [5]). All the measurements were performed at room temperature.

3. Results and Discussion

Our idea was that in arrangement where the TFT sensor has active electrode layer situated very close to rotating vessel wall (xmin) according to figure 5, we should obtain laminar flow along the electrodes so the sensor response would be very clear.

The dependence of output current responses on rotation speed is shown in figure 6. From the results it is clear that the sensors' output current response is increased two times from the measurement done at lowest achievable rotations (75 rpm). Unfortunately a problem with noise was occurred again as it was in [4]. A noise is appeared from 150 rpm and dramatically grows up from 200 rpm. Therefore the maximum acceptable rotation speed was 175 rpm respectively 150 rpm.

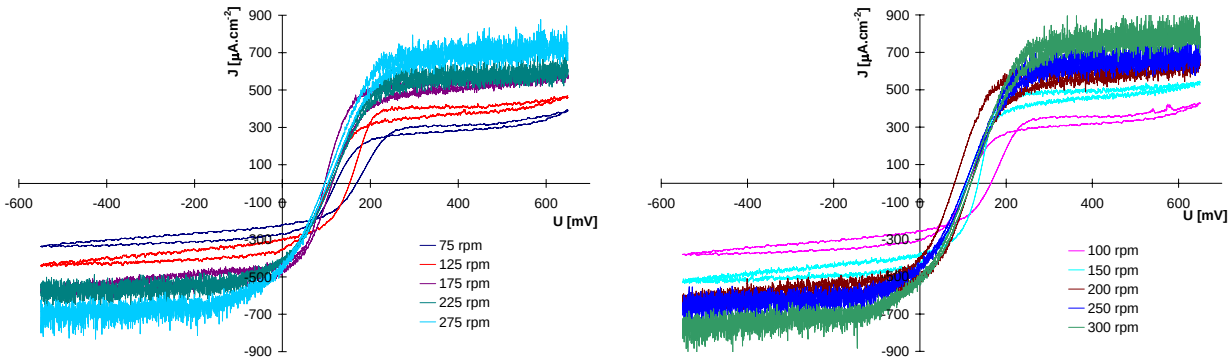

Fig. 6 Dependence of output current responses on rotation speed.

Next step was to find suitable position of the sensor in the vessel. For better evaluation of influence of sensor position to the output current response the rotation speed was set to 300 rpm.

Dependence of output current response on x axis position is shown in the figure 7a. It is obvious that the positioning of the sensor in x axis does not have so big influence as the rotation speed but it is necessary to find the compromise between output current response and noise. The lowest noise was achieved at xmax position. Very interesting is that the output current response is not linear with x position.

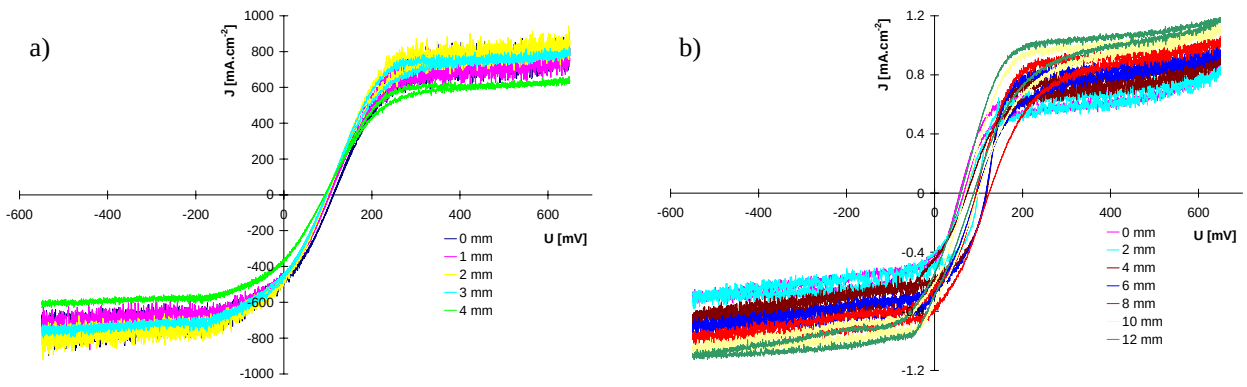

Fig. 7 Dependence of output current response on a) x axis from 0 to 4 mm b) y axis from 0 to 12 mm.

In case of y axis position is the situation little different. The output current response is increasing with increase of y position, but the noise is more or less the same in all range (fig. 7b). It proves that the response quality is not given by laminarity of flow. The best result was achieved in ymax position (the one against the direction of rotation).

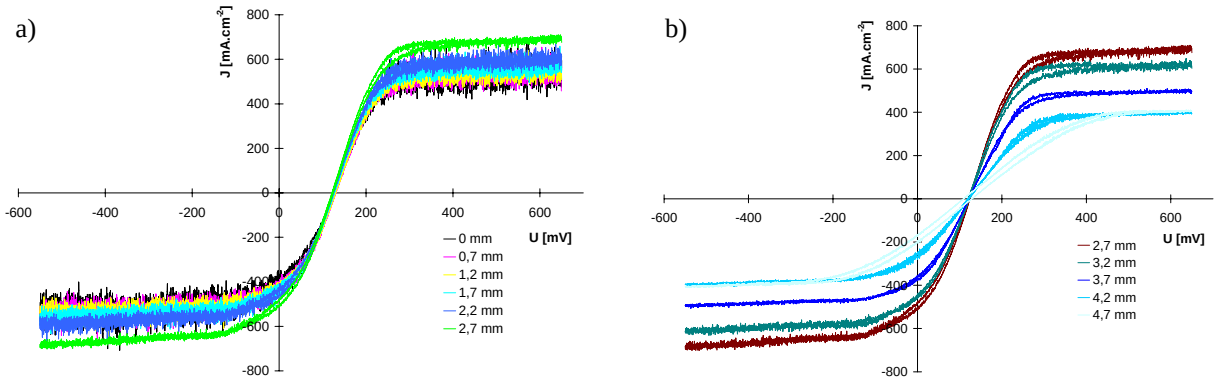

Fig. 8 Dependence of output current response on a) z axis from 0 to 2,7 mm b) z axis from 2.7 to 4.7 mm.

In the figure 8a there is shown the dependence of output current response on z axis from 0 to 2,7 mm. In this case we presumed that there would not be any response dependence. But from results is obvious that there is some little dependence and the sensor is more outside the solution the response higher is. The noise is also lower with z position increasing and almost disappears at the cost of response decreasing when some

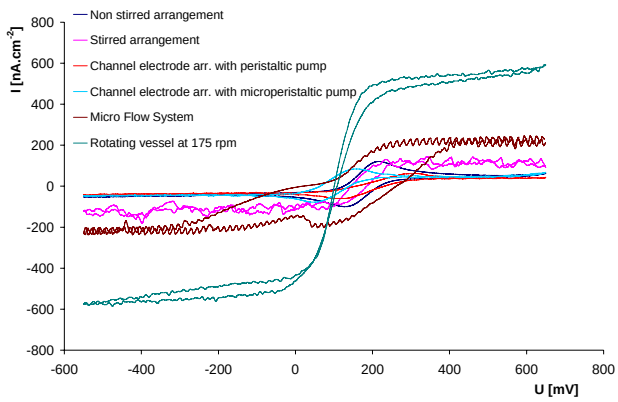

Fig. 9 Current responses comparison of different electrochemical arrangements.

little part of the sensor is pulled out (fig. 8b).

Finally there were made a comparison of commonly used electrochemical arrangements such as non stirred arrangement, unreproducible stirred arrangement, channel electrode with peristaltic pump arrangement and wall-jet based Micro Flow System [9]. The sensors, measuring conditions and chemicals were used the same in all measurements. From the figure 9 it is clear that in comparison with other devices this new analytical device has very good results and appears to be very suitable for utilization with thick-film biosensors or chemical sensors.

4. CONCLUSIONS

Achieved results show that the device for controlled flow of electrolyte to sensor works properly. They show that new device prototype gives similar information as others common used electrochemical arrangements. Big dependence of response on vibrations mentioned in our previous work that are caused by bad axial alignment of the vessel was partially suppressed by better construction design and better device fabrication accuracy in this work.

From the results is clear that in measurements some lower noise was appeared again. Noise also plays a big role in experiment setup. The dependences of current responses on sensor position show that by suitable combination of sensor position in the rotating vessel is possible to reach of very good current response progress with no or very low noise.

In comparison of commonly used electrochemical arrangements it is obvious that this new electrochemical analytical arrangement has very good results and appears to be very suitable for utilization with thick-film biosensors or chemical sensors.

Finally the results indicates that it is necessary to put emphasis on flow systems working with biosensors or chemical sensor where they can multiply the output current responses and by this increase the detection limit, accuracy, reliability or reproducibility of measurements.

5. ACKNOWLEDGEMENT

Funding for this work was provided by the Czech Ministry of Education in the frame of Research Plan MSM 0021630503 MIKROSYN and Czech grant FRVS 3313/2006.

6. REFERENCES

[1] Vydra, F., Stulik, K., Julakova, E.: *Rozpousteci polarografie a voltametrie*, SNTL, Praha 1977.

[2] Haskard, M., Pitt, K.: *Thick-film Technology and Application*, Elektrochem. Pub. LTD, GB 1997.

[3] Harsanyi, G.: *Sensor technologies and Applications*, Department of Elektronics technology, Technical University of Budapest, Budapest.

[4] Prasek, J., Krejci, J.: *A New Possibility of Thick film Biosensor Substrate Properties Measurement*. Proceedings of IEEE Internacional Conference on Sensors 2003. IEEE Sensors 2003, Toronto, Canada. Stoughton, WI 53589, USA: IEEE, 2003, pp. 656 - 660, ISBN 0-7803-8134-3.

[5] BVT Technologies, a.s.: web pages, available at http://www.bvt.cz.