DESIGN AND SIMULATION TESTING OF SELECTIVE LC-AMPLIFIERS WITH ACTIVE INDUCTORS

Ivailo Pandiev[(1)], Dimiter Stamenov[(2)], Lila Donevska[(3)]

Technical University of Sofia, Kliment Ohridski Street No. 8, 1000 Sofia, Bulgaria, phone: +359 2 965 2620, e-mail: [(1)]ipandiev@tu-sofia.bg, [(2)]dstam@tu-sofia.bg, [(3)]lidon@tu-sofia.bg

The present paper discusses the development of a specific type of selective LC amplifier with an active inductor and a current-feedback amplifier (CFA) with an additional port for control. The active inductor (gyrator) is built on the base of a general impedance converter (GIC), consisting of two op amps and RC-elements. The gyrator transforms the capacitance of the circuit to the emulated inductance. The main advantages of this new configuration are the insignificant influence of the load over the parameters of the amplifier and the possibility for independent tuning of the voltage gain and the Q-factor of the circuit. Some recommendations for designing this kind of analogue circuit are given, based on simulation results and symbol analysis of the transfer function. To confirm the validity of the design procedure, simulation results are compared with measurements of the electrical parameters in a practical LC amplifiers with small Q-factor and voltage gain, where a good agreement between simulations and measurements is found.

Keywords: Selective LC-amplifiers, CFA, Active inductor, Gyrator, Q-factor, Simulation.

1. INTRODUCTION

The selective LC amplifiers are essential building blocks of contemporary communication and measurement electronic systems. In the past ten years the popularity of current-feedback amplifiers (CFA) has increased considerably as they were found to be able to overcome the limitations from conventional voltage-feedback amplifiers (VFA). A CFA is equivalent to a second-generation current conveyor (CCII) with an output voltage buffer [1]. The main advantages of the CFAs are wide bandwidth, which is relatively independent of the closed-loop gain, high slew rate and simplicity of realization of various functions with the least possible number of external passive components. The analysis of the semiconductor data books has shown that some of the monolithic CFAs provide an additional pin between the first stage (current-controlled source) and the second stage (voltage buffer), where the output impedance is very high (magnitude of several mega ohms) [2, 3]. This allows the usage of those types of CFAs in selective LC amplifiers, oscillators, VCOs, etc.

In recent years, a number of papers have been published describing various electronic RC circuits with current conveyors and CFAs [4-6]. The CFA based topologies offer the following advantage comparing to the current conveyor based electronic circuits. The CFA based oscillators have low output impedance and higher operating frequency than current conveyor circuits. Recently, a selective LC amplifier using CFA with additional port for control was proposed [7]. The resonance LC amplifier, proposed in [7], has the following advantages over the other circuits with RC passive elements: (1) the insignificant influence of the load over the

parameters of the amplifier; (2) ability for independent fine tuning of $A_{U\,max}$ and f_o; (3) high input and low output impedance; (4) minimum number of external passive elements (resistive dividers in the feedback of a CFA and a LC tank). However, the majority of the published electronic circuits have small equivalent resonance resistance of the LC tank and there is no possibility for independent tuning of the voltage gain, the resonance frequency and the Q-factor of the circuit.

In this paper a selective LC amplifier with active inductor is derived using a circuit presented in Ref. [7]. The proposed analogue circuit consists of a CFA, several passive RC elements and a gyrator, based on a general impedance converter (GIC) [8, 9].

2. CIRCUIT DESCRIPTION

The proposed circuit of the LC amplifier is shown in Fig. 1. It is based on a CFA X_1 with negative voltage feedback, implemented with the resistors R_1' and R_F. This implementation achieves a higher input resistance, compared to the inverting amplifier. The negative feedback can be made frequency-dependent, through changing the value of the capacitor C_1. A parallel resonance LC tank was connected to the additional op amp correction pin (*out*2 in Fig. 1). This configuration has insignificant influence of the load over the parameters of the amplifier (voltage gain, Q-factor, ect.). This is because the LC tank is not directly connected to the output, but through a buffer – voltage follower (second stage of the CFA), which has a small output resistance. In the proposed circuit, in order to obtain higher resonance resistance of the LC tank at a low operating frequency, the inductor L is replaced with active inductor, using GIC. This active inductor consists of two operational amplifiers (X_2 and X_3), three resistors and one capacitance [10].

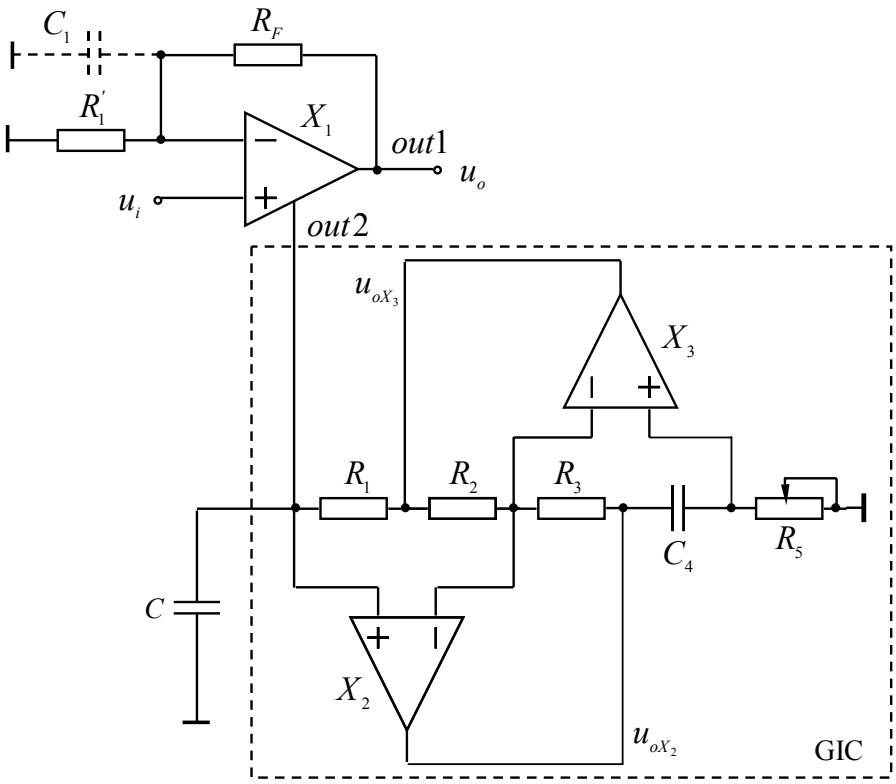

Fig. 1. Proposed selective LC amplifier with active inductor and CFA

The input impedance of the equivalent LC tank (between nodes *out*2 and ground) is obtained by using nodal voltage method, where the op amps (X_2 and X_3) were

substituted with a linear model. It reflects only the small-signal behaviour of the real device, while other parameters are accepted to be ideal. The small-signal characteristic of the op amps approximated by first-order transfer function is determined by the following expression:

$$\dot{A}_d = \frac{A_{do}}{1 + j(f / f_p)}, \tag{1}$$

where A_{do} is the open-loop voltage gain at $f << f_p$ and f_p is the pole frequency of the $\dot{A}_d$.

Including the external elements we get the equivalent circuit of the analyzed equivalent LC tank. The $[Y]$-matrix of the circuit was composed using the well-known formulas [11], and after the transformations we get the following expression for the input impedance:

$$z_{in} = \frac{j\omega \dfrac{C_4 Y_2}{Y_1 Y_3 Y_T} + \dfrac{Y_2 + Y_3}{A_d Y_1 Y_3}}{1 + j\omega \left[\dfrac{Y_1 Y_3 C_4}{A_d} + \dfrac{Y_1 Y_2 C_4}{A_d} + \dfrac{(-Y_2 + Y_3) C}{A_d} Y_T \right] \dfrac{1}{Y_1 Y_3 Y_T} - \omega^2 \dfrac{C C_4 Y_2}{Y_1 Y_3 Y_T}}, \tag{2a}$$

where $Y_1 = 1/R_1$, $Y_2 = 1/R_2$, $Y_3 = 1/R_3$ and $Y_T = 1/R_5$.

The simplified equivalent circuit of the LC tank with an active inductor presented by an equivalent inductance L_e is given in Fig. 2 [12]. The input impedance for $R_p >> R_L$ of the circuit from Fig. 2 is given in equation (2b).

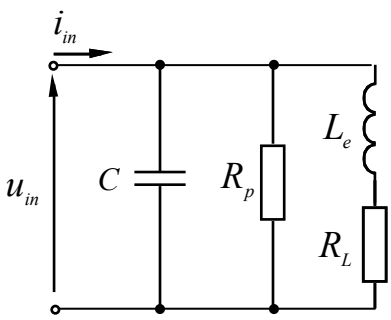

Fig. 2. Simplified equivalent circuit of the LC tank with an active inductor

$$z_{in} = \frac{u_{in}}{i_{in}} = \frac{j\omega L_e + R_L}{1 + j\omega \left(R_L C + \dfrac{L_e}{R_p} \right) - \omega^2 L_e C}. \tag{2b}$$

The elements L_e, R_L, R_p and C can be obtained by comparing an equation (2a) with (2b).

$$L_e = \frac{Y_2 C_4}{Y_1 Y_3 Y_T} = \frac{R_1 R_3 R_5}{R_2} C_4, \tag{3a}$$

$$R_L = \frac{Y_2 + Y_3}{Y_1 Y_3 A_d} = \frac{R_2 + R_3}{R_2 A_d} R_1, \tag{3b}$$

$$R_p = \frac{\dfrac{C_4 Y_2}{Y_1 Y_3 Y_T}}{\left[\dfrac{Y_1 Y_3 C_4}{A_d} + \dfrac{Y_1 Y_2 C_4}{A_d} + \dfrac{(-Y_2 + Y_3) C}{A_d} Y_T \right] \dfrac{1}{Y_1 Y_3 Y_T} + \dfrac{Y_2 + Y_3}{A_d Y_1 Y_3} C}. \tag{3c}$$

If the $R_1 = R_2 = R_3 = R$ for the equations given above can be found

$$L_e = R R_5 C_4, \tag{4a}$$

$$R_L = 2R / A_d, \tag{4b}$$

$$R_p = \frac{RR_5C_4}{R_5C_4 + RC}\frac{A_d}{2}. \tag{4c}$$

For frequency of the input signal

$$f_o \approx 1/2\pi\sqrt{L_eC} \tag{5}$$

resonance effect occurs in the LC tank, and as a result the equivalent impedance z_{in} is maximum. Then, based on equations (2), (4a), (4b) and (4c), and according to the formulas given in [12] the equivalent resonance resistance and the Q-factor can be found by

$$R_{oe} = \frac{1}{R_L(C/L_e) + 1/R_p} \quad \text{and} \tag{6a}$$

$$Q_{кр} = \frac{1}{R_L\sqrt{C/L_e} + \sqrt{L_e/C}/R_p}. \tag{6b}$$

The maximum of the quality factor $Q_{кр} = f(R)$, given with equation (6b) can be obtained by

$$R = \frac{C_4}{C}R_5\frac{A_{d1}}{A_{d1} + A_{d2}}, \tag{7}$$

where $A_{d1} \approx A_{do}$ and $A_{d2} \approx A_d(f_o)$ of the op amps X_2 and X_3.

After substituting Eq. (7) into Eq. (6b) the maximum value of the Q-factor yields:

$$Q_{кр,max} = \frac{xA_{d1}A_{d2}}{2x^2A_{d2} + 2A_{d1} + 2x^2A_{d1}}, \tag{8}$$

where $x = \sqrt{A_{d1}/(A_{d1} + A_{d2})}$.

The voltage gains between the input node *out*2 of the gyrator and the output nodes of the op amps X_2 and X_3 can be found by

$$K_{U1} = \frac{u_{oX2}}{u_{out2}} = \sqrt{1 + \left(\frac{1}{\omega C_4R_5}\right)^2} \quad \text{and} \tag{9a}$$

$$K_{U2} = \frac{u_{oX3}}{u_{out2}} = \sqrt{1 + \left(\frac{R_2}{R_3}\frac{1}{\omega C_4R_5}\right)^2}. \tag{9b}$$

The equations (9a) and (9b) show that for frequency $f_i = f_o$ and considering the condition (7) the voltage gains can be obtained as

$$K_U = K_{U1} = K_{U2} = \sqrt{1 + [A_{d1}/(A_{d1} + A_{d2})]} = \sqrt{1 + x^2}. \tag{10}$$

The complex transfer function of the proposed amplifier with gyrator is obtained by an equation, introduced in [7].

$$\dot{A}_U = \frac{\dot{U}_o}{\dot{U}_i} = \frac{1 + \frac{R_F}{R_1^{'}} + j\omega C_1 R_F}{\left[1 + \frac{R_F}{R_{re}}\left(1 + \frac{R_{in}^-}{R_1^{'}} + \frac{R_{in}^-}{R_F}\right)\left(1 + \frac{R_o}{R_L}\right) + \frac{R_F R_{in}^- C_1}{L}\left(1 - \frac{\omega^2}{\omega_o^2}\right)\left(1 + \frac{R_o}{R_L}\right)\right]\left[1 + jQ_e\left(\frac{\omega}{\omega_o} - \frac{\omega_o}{\omega}\right)\right]} \tag{11}$$

where

$$Q_e = \frac{R_F\left(1 + \frac{R_{in}^-}{R_1^{'}} + \frac{R_{in}^-}{R_F}\right)\left(1 + \frac{R_o}{R_L}\right)}{\rho\left[1 + \frac{R_F}{R_{re}}\left(1 + \frac{R_{in}^-}{R_1^{'}} + \frac{R_{in}^-}{R_F}\right)\left(1 + \frac{R_o}{R_L}\right) + \frac{R_F R_{in}^- C_1}{L_e}\left(1 - \frac{\omega^2}{\omega_o^2}\right)\left(1 + \frac{R_o}{R_L}\right)\right]} \tag{12}$$

- equivalent quality factor of the amplifier, $R_{re} = R_{oe} \,||\, R_t$ is the equivalent resonance resistance of the circuit,

$$\rho = \sqrt{\frac{L_e}{C_e}} \tag{13}$$

- characteristic resistance of the LC tank,

$$C_e = C_t + C + C_M \tag{14}$$

- equivalent capacitance of the LC tank, R_{in}^- - input resistance of the non-inverting input, R_t and C_t, equivalent to z_t - transmission resistance with active and reactive components; R_o - output resistance of the CFA.

Formula (11) shows that for frequency $\omega = \omega_o$, the voltage gain is maximum, e.g.

$$A_{U\,max} = \frac{\sqrt{\left(1 + \frac{R_F}{R_1^{'}}\right)^2 + \left(\omega_o C_1 R_F\right)^2}}{1 + \frac{R_F}{R_{re}}\left(1 + \frac{R_{in}^-}{R_1^{'}} + \frac{R_{in}^-}{R_F}\right)\left(1 + \frac{R_o}{R_L}\right) + \frac{R_F R_{in}^- C_1}{L_e}\left(1 - \frac{\omega^2}{\omega_o^2}\right)\left(1 + \frac{R_o}{R_L}\right)}. \tag{15}$$

3. SIMULATION TESTING, EXPERIMENRTAL RESULTS AND ANALYSIS

The LC amplifiers were implemented with CFA in accordance with the presented theoretical analysis, and some variants for the element values are presented in Tables 1, 2 and 3, which correspond to the results for resonance frequency, amplification coefficient and Q-factor, obtained with physical experiments and theoretical analysis of the circuit, defined in formulas (5), (12) and (15). The values for the other circuit parameters are calculated using equations (4a), (6a), (13) and (6b). Besides these methods, the verification for all variants of the circuit in Fig.1 was performed within EDA OrCAD, using fourth level of complexity SPICE op amp macromodels, providing maximum accuracy of the modelled electrical characteristics [13].

In accordance with the theoretical analysis, there are three variants of the LC amplifiers given in Table 1, with a resonance frequency of $1kHz$, Q-factor 20 and

three values for the voltage gain. The electronic circuits are implemented with CFA AD844 [3]. Also the gyrators are realized with dual JFET op amps AD828 [3].

Variant 1 can be characterised with big resistance value $R_1^{'}$=500Ω, which is connected with the smallest characteristic resistance ρ and equivalent inductance L_e. In this case, the voltage gain $A_{o,max}$ has minimum value. As can be seen, the Q-factor is not changing with the variation of the resistor $R_1^{'}$. This is because, according to formula (8), the maximum value of the quality factor $Q_{кр,max}$ only depends on the deviation between A_{d1} and A_{d2} for the chosen op amps. Also, in variant 1 the resistors R_1, R_2 and R_3 have minimal values, which can lead to current limiting of the output stages of X_2 and X_3. To obtain a higher voltage gain variants 2 and 3 are proposed, with $R_1^{'} = 100\Omega$ and $R_1^{'} = 50\Omega$, respectively. Reducing the resistance $R_1^{'}$, also leads to increase of the characteristic resistance ρ and R_{oe}. Also the $Q_{кр,max}$ and the Q_e remain unchanged with the change of the depth of the feedback. Actually, this is one of the advantages of the proposed resonance amplifier with gyrator in comparison with the circuit, realized with a passive inductor [7]. It is visible from Table 1, that further reduction of the resistance $R_1^{'}$ may lead to decrease in the CFA bandwidth according to the equation $GBW \approx 1/\left[2\pi R_F C_t \left(1 + R_{in}^{-} / R_1^{'}\right)\right]$ [9]. Also, by increasing the feedback resistance R_F will similarly lead to limiting of the op amp bandwidth.

Table 1. Variants of the selective LC amplifiers for $R_1^{'} = 500$, $R_1^{'} = 100$ and $R_1^{'} = 50\Omega$

Variant	f_o, *kHz*	$A_{U\,max}$ *pre-defined*	Q_e *pre-defined*	R_F, *kΩ*	$R_1^{'}$, Ω	C, *nF*	$R = R_5$ Ω	C_4, μ*F*	f_o, *Hz* *sim./meas.*	$A_{o\,max}$ *sim./meas.*	Q_e *sim./meas.*
1	1	10	20	5	500	590	191	1,18	998/1058	10,8/9 (1)	20,5/19,3
2	1	50	20	5	100	433	260	0,866	999/1030	50/37 (2)	22,3/19,8
3	1	100	20	5	50	325	347	0,649	998/981	99/88 (3)	24,4/17,3

Notes: (1) $L_e = 42{,}9mH$, $R_{oe} = 280k\Omega$, $\rho = 270\Omega$, $Q_{кр,max} = 1040$ and $R_L = 500\Omega$; (2) $L_e = 58{,}6mH$, $R_{oe} = 385k\Omega$, $\rho = 367\Omega$, $Q_{кр,max} = 1040$ and $R_L = 500\Omega$; (3) $L_e = 78{,}1mH$, $R_{oe} = 508k\Omega$, $\rho = 490\Omega$, $Q_{кр,max} = 1040$ and $R_L = 500\Omega$.

For the chosen feedback depth and constant value of the Q-factor it is possible to obtain different resonance frequency f_o amplifiers, changing the value of the capacitance C. Results of the simulation testing for resonance frequencies $10 \div 100kHz$ of the circuit in Fig. 1 are given in Table 2. Raising the frequency f_o leads to the decrease of the resonance resistance R_{oe} and the maximum quality factor of the LC tank $Q_{кр,max}$. The quality factor Q_e and voltage gain $A_{U\,max}$ of the LC amplifiers remains with constant values, because the ratio R_F / R_{re} according to equations (12) and (15) is lower than unity ($R_{re} >> R_F$).

Table 2. Variants of the LC amplifiers for resonance frequencies $10 \div 0{,}1MHz$

Variant	f_o, kHz	$A_{U\,max}$ pre-defined	Q_e pre-defined	R_F, $k\Omega$	R_1', Ω	C, nF	$R = R_5$ Ω	C_4, μF	f_o, kHz sim.	$A_{o\,max}$ sim.	Q_e sim.
1	0,01	10	20	5	500	5900	191	118	0,0998	10,8 (1)	20,8
2	1	10	20	5	500	590	191	1,18	0,998	10,8 (2)	20,5
3	10	10	20	5	500	59	199	109	9,97	10,8 (3)	21,58
4	100	10	20	5	500	6,42	231	7,38	99,93	10,8 (4)	22,91

Notes: (1) $L_e = 4{,}29H$, $R_{oe} = 4{,}86M\Omega$, $\rho = 274\Omega$, $Q_{кр,max} = 17740$ and $R_L = 500\Omega$; (2) $L_e = 42{,}9mH$, $R_{oe} = 280k\Omega$, $\rho = 270\Omega$, $Q_{кр,max} = 1040$ and $R_L = 500\Omega$; (3) $L_e = 4{,}28mH$, $R_{oe} = 243k\Omega$, $\rho = 268\Omega$, $Q_{кр,max} = 903$ и $R_L = 500\Omega$; (4) $L_e = 395\mu H$, $R_{oe} = 50{,}4k\Omega$, $\rho = 248\Omega$, $Q_{кр,max} = 203$ and $R_L = 500\Omega$.

Table 3 presents the influence of the quality factor Q_e at constant voltage gain A_U for a single resonance frequency. As mentioned previously, the greater the quality factor Q_e the lower the characteristic equation ρ, according to equation (12). Also the resistors R_1, R_2 and R_3 decreases. To avoid the current and voltage limiting of the op amps $R = K_U.R_5$ is chosen, where $\sqrt{1 + \left[A_{d1}/\left(A_{d1} + A_{d2}\right)\right]^2} < K_U < \left(U_{o\,max}/U_{om}\right)$ ($U_{o\,max}$ is the output voltage swing at frequency f_o, U_{om} - maximum output voltage of the amplifier). Therefore, the $Q_{кр}$ is different from the maximal value and will depend on the external elements. The voltage gain of the op amps is set to $K_U = 3$ for variants 1 and 2, and the voltage gain is $K_U = 5$ for variant 3, which cannot lead to current limiting of the output stages of X_2 and X_3. As can be seen in Table 3, the simulation results for the $A_{U\,max}$ and Q_e are close to the calculated values using equations (15) and (12). This is because the ratio R_F / R_{re} is lower than unity.

Table 3. Variants of the selective LC amplifiers for different Q-factor

Variant	f_o, kHz	$A_{U\,max}$ pre-defined	Q_e pre-defined	R_F, $k\Omega$	R_1', Ω	C, nF	R Ω	R_5 Ω	C_4, μF	f_o, Hz sim.	$A_{o\,max}$ sim.	Q_e sim.
1	1	100	50	5	50	837	404	135	0,558	997	95,4 (1)	57,3
2	1	100	100	5	50	1760	256	63,9	0,881	993	88 (2)	112
3	1	100	200	5	50	3950	143	28,5	1,58	997	71,6 (3)	205

Notes: (1) $L_e = 30{,}3mH$, $R_{oe} = 169k\Omega$, $\rho = 190\Omega$, $Q_{кр,max} = 889$ and $R_L = 500\Omega$; (2) $L_e = 14{,}4mH$, $R_{oe} = 68{,}4k\Omega$, $\rho = 90{,}4\Omega$, $Q_{кр,max} = 754$ and $R_L = 500\Omega$; (3) $L_e = 6{,}43mH$, $R_{oe} = 26{,}1k\Omega$, $\rho = 40{,}3\Omega$, $Q_{кр,max} = 643$ and $R_L = 500\Omega$.

To verify the theoretical analysis, a selective amplifier with gyrator was compared with the circuit, realized with passive inductor. The physical experiments show that with everything else equal, the achieved Q-factor for the proposed circuit with gyrator is at least twice as great as the one in the circuit with a passive inductor.

4. CONCLUSIONS

In the present paper a selective LC amplifier with active inductor has been proposed, built on the base of CFA with an additional correction pin for control. The LC tank with gyrator is connected to the additional op amp correction pin. In this way the insignificant influence of the load over the parameters of the amplifier and the ability for independent tuning of the voltage gain and the Q-factor is provided. The advantages of these selective amplifiers have been described. Validity of the design procedure have been tested by comparing simulation results with measurements of the electrical parameters in a practical LC amplifiers with small Q-factor. The experimental results agree well with the theoretical analysis.

5. REFERENCES

[1] Mucha, I., "Approaching Low Power with Current OpAmps", ECCTD'95 *European Conference on Circuit Theory & Design*, 1995, vol. 1, pp. 529-532.
[2] Linear Products, 2000, Santa Clara: *National Semiconductor*.
[3] Analog Devices, 2000, Designer's Manual, Norwood, Mass.: *Analog Devices*.
[4] Vosper, J.V., M. Heima, "Comparison of single- and dual- element frequency control in a CCII-based sinusoidal oscillator," *Electronic Letters*, 1996, vol. 32, No. 25, pp. 2293-2294.
[5] Sh. Liu, Ch. Shin, and D. Wu, "Sinusoidal oscillators with single element control using a current-feedback amplifier", *International Journal of Electronics*, 1994, vol. 77, No 6, pp. 1007-1013.
[6] Toker, A., O. Cicekoglu and H. Kuntman, "On the oscillator implementations using a single current feedback op amp," *Computers and Electrical Engineering*, 2002, vol. 28, pp. 375-389.
[7] Pandiev, I. "Analysis and design of LC amplifiers using current-feedback amplifiers", *Proceedings of the Technical University of Sofia*, vol. 53, 2004, pp. 47-55.
[8] Weddingen, Ch., W. Jüngst, *Elektronik*, Springer-Verlag. Berlin, Heidelberg, New York, 1993.
[9] Meier, U., W. Nerreter, *Analoge Schaltungen*, Hanser-Verlag, München, Wien, 1997.
[10] Jung, W.G., "Op amp applications", Analog Devices, Norwood, MA, 2002.
[11] Boyanov, J., and E. Shoikova, 1989, Electronic Circuits Theory, Sofia, Tehnika (in Bulgaria).
[12] Tietze, U., Ch. Schenk. "*Halbleiter-Schaltungstechnik*," 11.1 Auflage. Springer-Verlag, New York, 2000.
[13] Amplifiers and Comparators- SPICE Models, *Analog Devices* 2006, http://www. analog.com/.