SIMULATION RESEARCHES OF DC-DC INVERTOR WITH RL LOAD OF THE INVERTER PART

Penka Petrova Lencheva, Rumen Dimitrov Karov

Electrotechniques and Electronics, TU Sofia – branch Plovdiv, "Sankt Peterburg" blvd. No.61, Postal Code 4000 Plovdiv, Bulgaria, phone: +35932659713, e-mail: eng_Lencheva@mail.bg, r_karov@mail.bg

The basic purpose of the current paper is investigation of DC-DC voltage converter with RL load used as a step down converter of mains power. By the use of MOS power switches, a high working frequency is achieved - above 100kHz, which helps for reducing the size of reactive elements. Simulation researches have been made in order to prove the theoretical results and calculation methodology for scheme elements and parameters has been worked out too.

The used DC-DC voltage converter with RL load inverter part is shown on fig.1. The power supply is separated in to two parts with the help of two capacitors C1=C2=100μF. Using different types of MOS switches is possible in the current design. The use of MOSFET is reasonable when control frequency exceeds 100kHz. A rectifier bridge scheme, converts the AC output voltage in to DC supply of 12V. This way the reverse voltage is applied to each of the rectifier diodes and does not exceed the critical value for shotkky diodes, so these devices can be implemented in the scheme. It must be considered that output voltage depends on the resistor and output current (for the inverter). With the use of this scheme few ampere up to a hundred amps could be achieved without significant problems.

Bipolar and power MOS transistors complete the same functions in many pulse and linear schematics. Several advantages of power MOS switches are known- less switching time, less front pulse losses, less switch off delay. The greatest disadvantage is that these transistors have higher on-state voltage in comparison to saturated bipolar transistors, especially at high nominal voltages. Great advantage of power MOS transistors is that they give possibility for control circuit simplification. Short switching times and low commutation losses determine that these transistors can be used for power switch converters construction with achievement of high efficiency coefficient and frequency up to several hundred kHz. Considering these arguments we have chosen to use power MOS transistors- IRF840.

During converter feed up every one of both capacitors, shown on fig.1- C1 and C2 is charging up to 1/2Ud. The received control pulses switch on M1 and M2 on the definite high frequency.

The current expression can be determined with the use of the equivalent circuit at the commutation moment, which schematics has validity for the whole half-period: (fig.2).

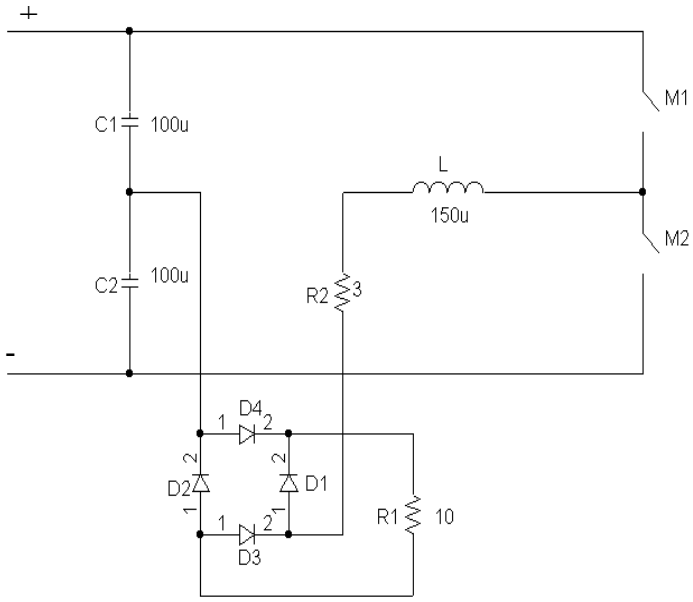

Фиг.1

The equivalent circuit differential expression is:

(1) $$L\frac{di}{dt} + Ri = \frac{Ud}{2} \qquad R=R1+R2 \qquad 0 \le t \le \pi/w,$$

were Ud is the supply voltage and its value is 300V.

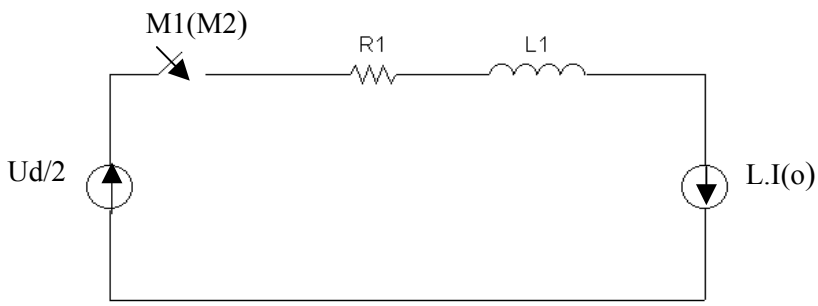

Фиг.2

(2) $$I(t) = \frac{Ud}{2R} \cdot \left(1 - \frac{2k}{2k-1} \cdot e^{-\frac{\omega t}{qk}}\right)$$

The current from the simulation researches is as follows (fig.3)
The maximum current is:

(3) $$\mathrm{Im} = \frac{Ud}{2R} \cdot \frac{1 - e^{-\left(\frac{R \cdot \pi}{L\omega}\right)}}{1 + e^{-\left(\frac{R \cdot \pi}{L \cdot \omega}\right)}}$$

(4) $$\mathrm{Im} = 2.459A$$

The following coefficients are entered:

(5) $$q_k = \frac{\omega L}{R} \qquad q_k = 6.981$$

- commutation coefficient, which describes the ratio between the reactive part of the commutation and active part of load resistance:

(6) $$k = \frac{1}{1 - e^{-\left(\frac{\pi}{q_k}\right)}} \qquad k = 2.76$$

- periodical coefficient, which depends on qk. This way for the current I_m for the final result we have:

(7) $$I_m = \frac{Ud}{2R} \cdot \frac{1}{2k-1}$$

The input current average value is:

(8) $$I_{AV} = \frac{Ud}{2R\pi} \int_0^{\pi} \left(1 - \frac{2k}{2k-1} \cdot e^{-\frac{R}{\omega L} \cdot \vartheta} \right) \cdot d\vartheta$$

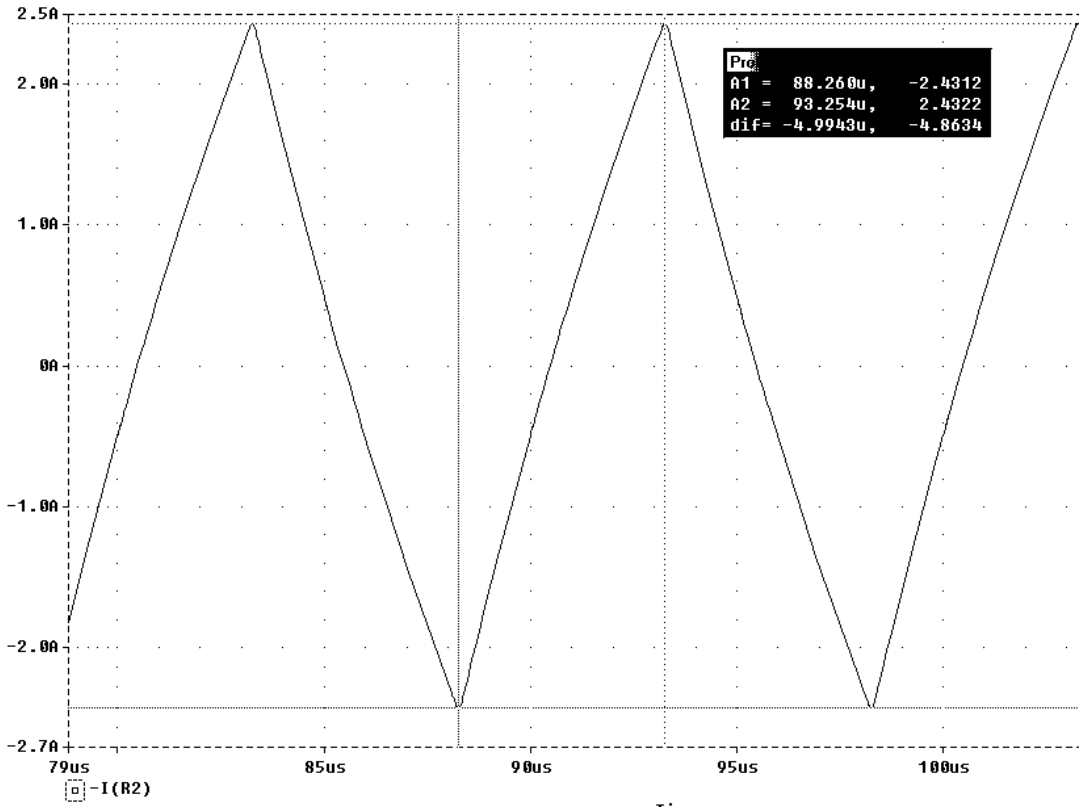

fig.3

Considering (8) average value of the output voltage for the DC-DC converter can be finding. On fig. 4 is shown the simulation result of the output voltage during the initial process of setting the regime of work.

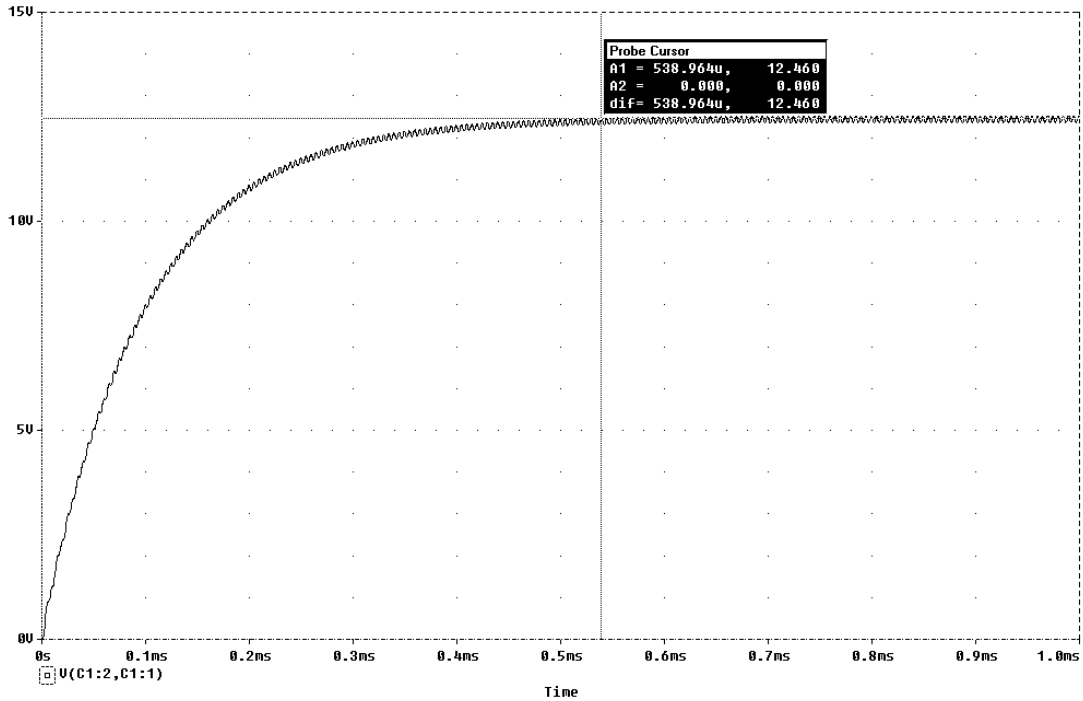

fig.4

References:

[1] Fabianowsk J., Gievse G., Voltage Source Series Inverters with Higher Power and Frequency ETZ Archiv (Germ) 1989/01 vol. 11 N4

[2] Grant D. and J. Gowar, Power MOSFET's-Theory and Applications. New York: Wiley, 1989, p.64

[3] R. Karov, Theoretical generalizations, dual relations and circuit improvement of power inverters and links, dissertation Sofia, 2003